FOLLOW THE LEADER.

MIRACLE

RECREATION EQUIPMENT COMPANY

Installation Manual

for your Miracle Playsystem

Brooklyn Park, MN

Work Order #: 435141

Date: 5/20/98

TOP VIEW
SCALE: 1"= 5'-0"

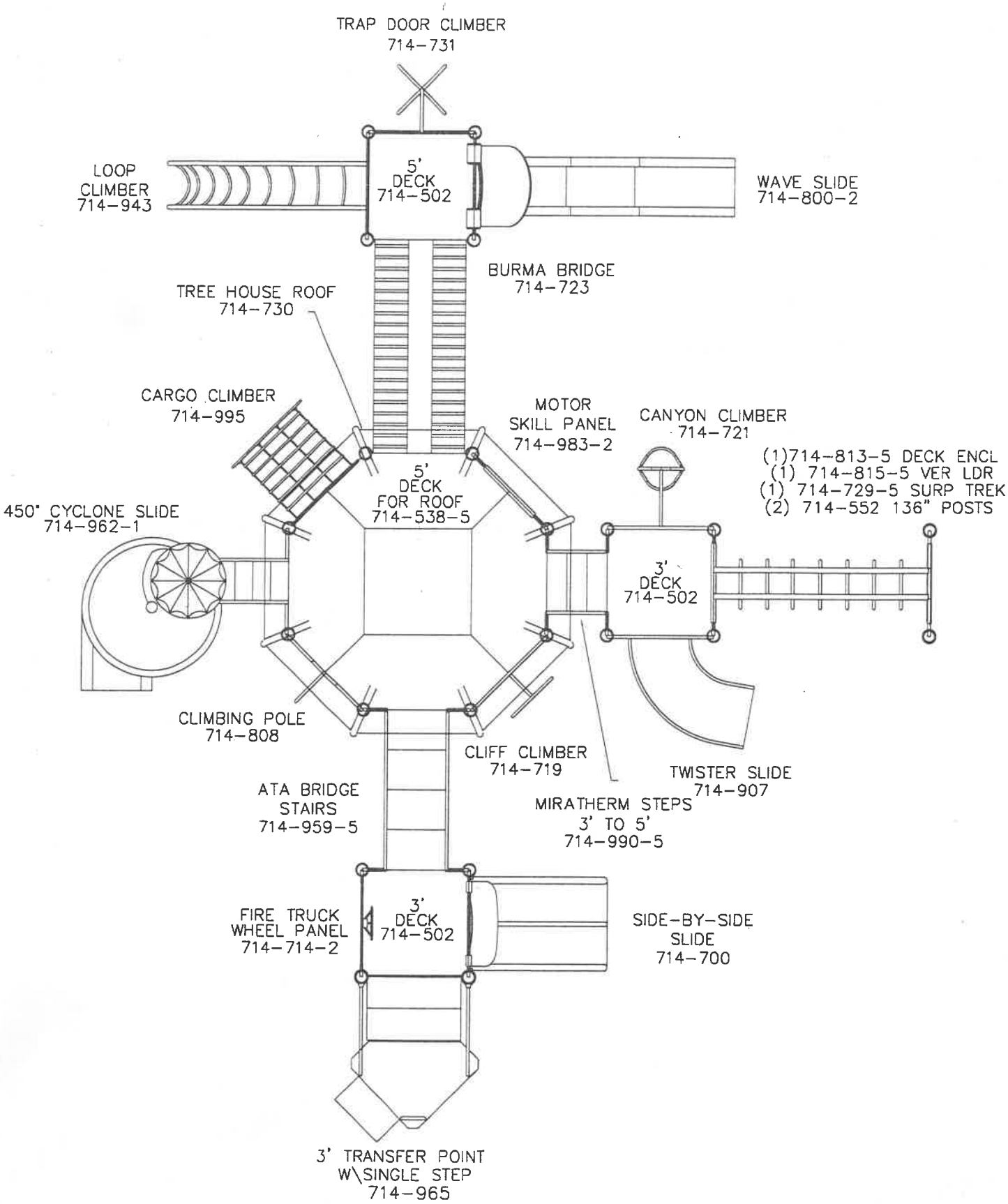

MIRACLE

RECREATION EQUIPMENT COMPANY

READ ME FIRST!

Miracles's Safety, Maintenance, & Installation Brochure

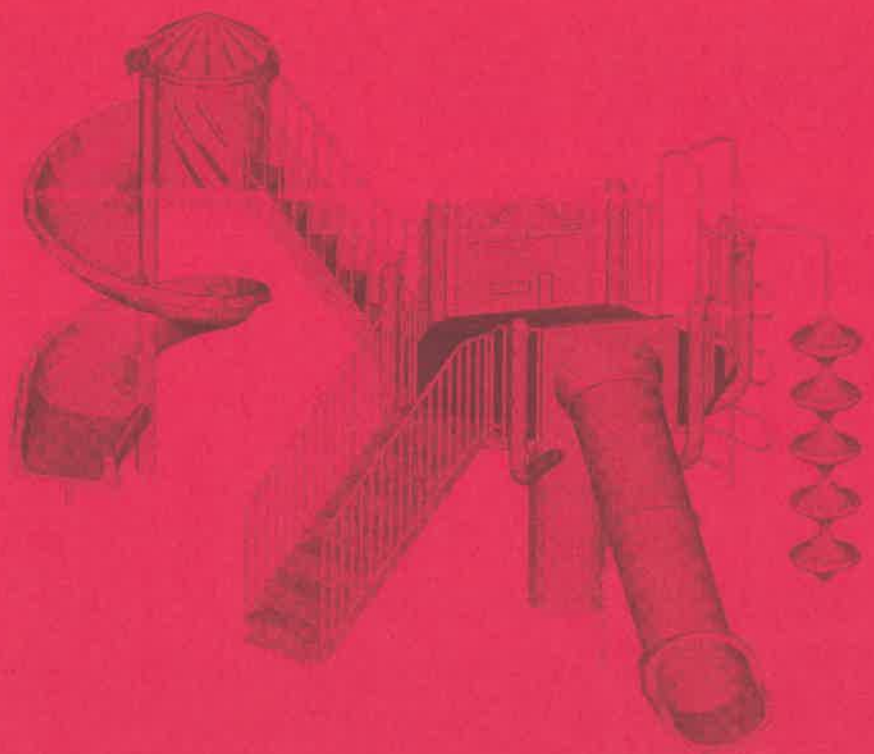

MIRACLE RECREATION EQUIPMENT COMPANY

P.O. Box 420

Highway 60 And Bybb Lane

Monett, Missouri 65708-0420

1-800-641-2092 Fax (417) 235-6173

WORLD WIDE WEB http://www.miracle-recreation.com

MIRACLE'S SAFETY, MAINTENANCE & INSTALLATION BROCHURE

Thank you for your purchase from Miracle Recreation Equipment Company. We at Miracle along with our Sales Representatives are very appreciative of your business and value you as a customer.

This brochure was prepared to acquaint you with the important installation, maintenance and safety information you are responsible for as owner of this equipment. It is of the utmost importance that playground equipment be installed according to the manufacturer's installation instructions which are provided by Miracle, and that the equipment be inspected on a regular basis and properly maintained.

Please keep this brochure with the extra set of installation instructions (blue envelope) in your files, should you ever need to order any replacement parts.

Again, thank you for choosing a Miracle product.

If you have any questions about your installation or any other concerns, please contact us or your Miracle Sales Representative. Our Sales Representatives' toll free phone numbers are listed in the back of this "Read Me First" document.

TABLE OF CONTENTS

POST-INSTALLATION CHECK LIST

- [ ] Check installation with protrusion gauges and head/torso probes.
- [ ] Double check all bolts, nuts, and set screws for tightness and proper hardware - washers, etc. Check that all excess bolt threads have been cut and peened smooth to expose no more than 2 threads.
- [ ] Wipe down the unit to eliminate dust/dirt (soap & water may be necessary).
- [ ] Pick up around construction site. All construction trash should be removed.
- [ ] Make contact with owner before leaving work-site; leave blue "customer envelope" and any spare parts with the owner.
- [ ] Notify the owner that the installation was done according to manufacturer's specifications. Note any exceptions, i.e. that the owner must still provide safety surface.
- [ ] Remind the owner that equipment should NOT be used for 72 hours after installation.
- [ ] See to it that the owner or proper authority "signs off" at the completion of the installation, prior to moving on to the next job site.
- [ ] If installation was not done according to specifications, please indicate changes and describe reason for doing so, and who authorized this change.

_____

_____

Authorized by: _____ on Date: _____

List any types of hardware that were a consistent problem, i.e. not working properly or shortages:

_____

_____

List any unusual problems or concerns about the installation:

_____

_____

_____ _____

(Signed by Authorized Customer.) (Date)

Safety Brochure 100
January 1, 1995 Rev. E

SCOPE

General safety recommendations applicable to the installation and maintenance of play equipment supplied by Miracle Recreation Equipment Company.

INSTALLATION

I. SURFACES

All play equipment must be installed over an acceptable impact absorbing surfacing material. It is the responsibility of the playground designer, installer and operator to ensure that the size, type and depth of impact absorbing surfacing material used complies with the U.S. Consumer Product Safety Commission "Handbook for Public Playground Safety" (CPSC Handbook). This impact absorbing surfacing material must cover the entire "Fall Zone" area to a depth appropriate for the height of the play equipment. The "Fall Zone" is an area under and all around each piece of play equipment. See the "Fall Zones" section below for specific dimensional sizes for specific types of play equipment. Please refer to the CPSC Handbook for a more detailed discussion of these issues.

Acceptable Surfaces

Acceptable impact absorbing surfacing materials include unitary safety surfacing such as pour-in-place rubber or rubber tile, and natural loose fill materials such as bark nuggets, wood mulch, wood chips, pea gravel and sand. Appropriate thicknesses for the Playsafe™ or Fall Saver™ materials can be obtained from your Miracle Sales Representative. For the loose fill materials listed, Miracle recommends a minimum depth of twelve (12) inches.

Unacceptable Surfaces

Unacceptable surfaces include turf, undisturbed natural ground, undisturbed compacted sand, decomposed granite, asphalt, concrete or any other hard surfacing.

FALL ZONES:

Fall zones are the areas under and all around each piece of play equipment that must be covered with an acceptable impact absorbing surfacing material (see "Surfacing" section above.) The specific size of these fall zones depend upon the type of play equipment as follows:

Regular Swings:

The fall zone must extend at least two (2) times the pivot point height to both the front and rear of the top rail. The fall zone must extend at least six (6) feet out at each end from the swing frame legs.

Tire swings:

The fall zone must extend at least six (6) feet plus the length of the suspension members in all directions. The fall zone must also extend at least six (6) feet out at each end from the swing frame legs.

Slides:

The fall zone must extend at least six (6) feet in all directions from the perimeter of the slide. Also, in front of the slide exit measuring from the point where the slide slope is reduced to 5 degrees, the fall zone must extend a total of four (4) feet plus the height of the platform.

All other play equipment:

The fall zone must extend at least six (6) feet in all directions from the perimeter of the play equipment.

II. OTHER IMPORTANT ITEMS

During the installation and maintenance process, ensure that:

A. There are no exposed concrete footings to trip over or fall on. The top of all footings must be at or below the bottom of the layer of impact absorbing surfacing material.

B. All bolt threads protruding beyond the nut are cut and peened smooth to the touch. Sharp edges and/or points of any kind must be eliminated. No more than two threads may be exposed beyond the end of the nut.

C. All bolts, screws, set screws or other fasteners are tightened securely. Missing bolts, set screws or other fasteners must be replaced immediately.

D. All "S" hooks and clevises are free of any wear. That all "S" hooks are closed metal to metal and all clevises and supporting hardware are securely attached. A Miracle "S" hook for swing seat use has the dimensions of 2-3/4" x 4-1/2" and looks like the following drawing.

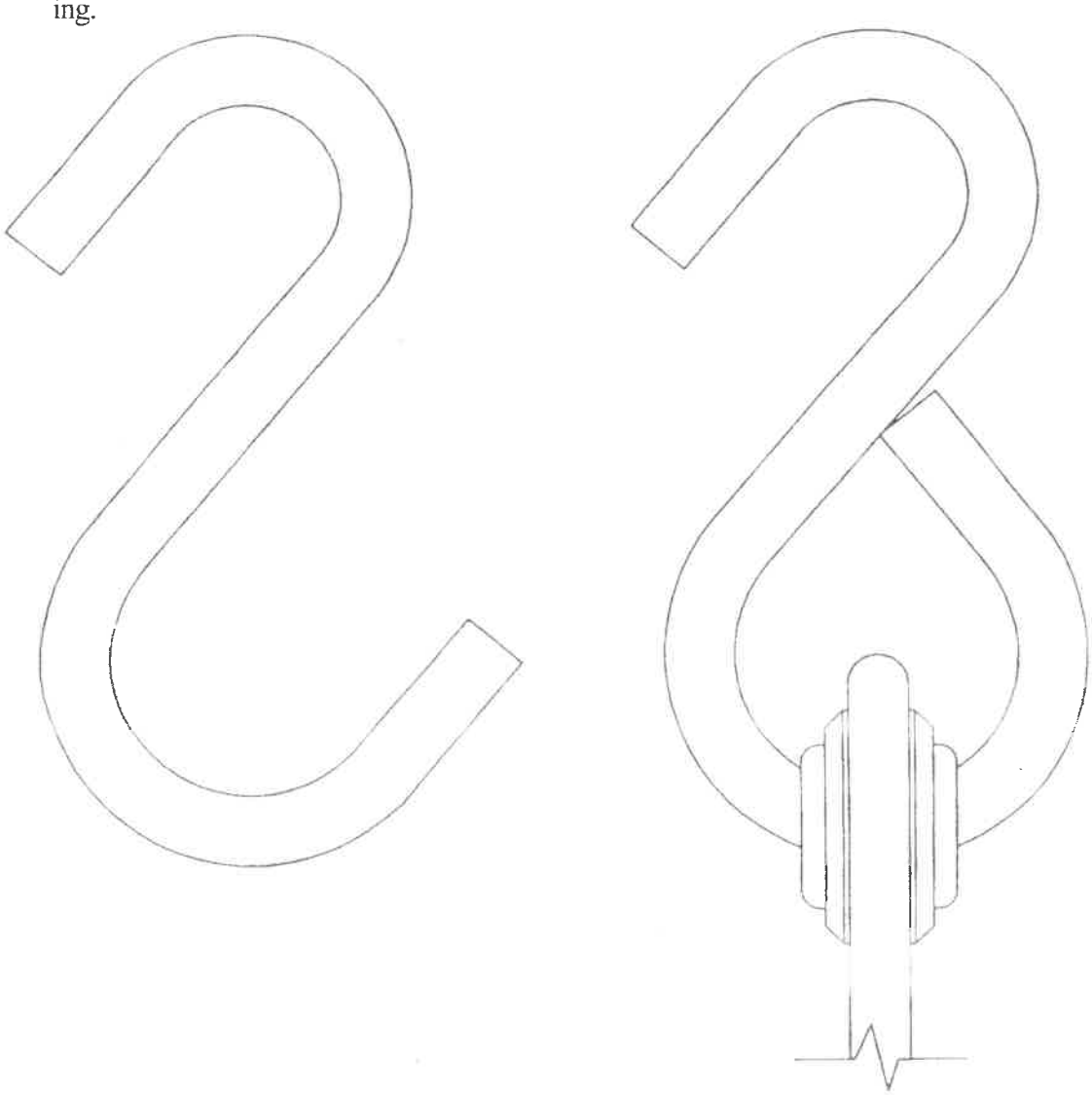

(ACTUAL SIZE)

MAINTENANCE

REGULAR MAINTENANCE INSPECTIONS

During the course of play (particularly with new play equipment which is heavily used the first few weeks), it is common that holes and trenches develop in loose fill impact absorbing surfacing material, i.e. under swings, around slides (exit, entry), around whirls, around and under climbers and see saws, etc. The loose fill impact absorbing surfacing material must be maintained at the appropriate depth of twelve (12) inches.

DURING REGULAR MAINTENANCE INSPECTIONS ENSURE:

A. There are no sharp edges and/or points of any kind.

B. All bolts, screws, set screws or other fasteners are tightened securely. Missing bolts, set screws or other fasteners must be replaced immediately. See Specifications and Installation Instructions for replacement parts listed in the bill of material or parts carton. Use only original replacement parts from Miracle.

C. All "S" hooks and clevises are free of wear with all "S" hooks closed metal to metal and all clevises and supporting hardware securely attached.

D. All swings seats are in good condition. Some examples of things to look for indicating swings seats/ swing riders need to be repaired or replaced:

   If the grommet area or any other part of the seat shows signs of wear such as rust or stress cracks in the rubber, immediately remove the seat from service. Be sure that the grommet is in good condition and that only the large "S" hook passes through the swing seat grommet.

E. If any of the following conditions are present, immediately remove the seat from service:

   Rusting, splitting, checking, warping, complete breakage, visible cracks, splintering, deteriorated insert material, exposure of the rubber encapsulated metal in the seat, loose seats, heavy seats with sharp edges or corners, loose bolts and nuts, exposed and/or protruding parts, pinch and/or crush points and/or evidence of vandalism.

F. All of chains, rods, ropes or cables are in good condition. Replace chains, rods, ropes or cables if any of the following are observed:

   Cracking, rusting, complete breakage, chain links that have become thin with wear, bending, warping, frayed rope and/or cable, deformation, worn, loose or sharp edges, exposed ends, protrusions and/or evidence of vandalism.

Anything showing any sign of wear, fatigue or otherwise presenting an unsafe condition must be immediately replaced. If not immediately replaced, the play equipment must be removed from service and no one permitted to use the play equipment until the problems are corrected. Be sure to understand, apply and utilize the CPSC Handbook For Public Playground Safety, all materials and information provided by Miracle, and your own knowledge and experience in determining if wear, fatigue or any other unsafe condition exists.

All missing parts must be immediately replaced. The play equipment must be removed from service and no one permitted to use the play equipment until the missing parts are replaced. Use only original replacement parts from Miracle.

This is a partial listing of regular maintenance and inspection items. Utilize the CPSC Handbook as an additional guide and reference. You must develop a checklist specific to your needs as determined by use, weather, etc. **Maintenance is your responsibility. Only you can do it! Please protect the user of the play equipment.**

MISUSE

Any attempt to alter, adapt, change, attach to or assemble the play equipment for anything other than its intended use as stated in the specification/installation instructions is strictly prohibited. Miracle's play equipment by design has an intended specific use. Lack of maintenance and/or usage in a manner other than its intended use can result in serious injury.

INSTALLATION POLICY

All play equipment is shipped unassembled. Miracle does not install play equipment. Miracle's products are safe for use when installed (which includes the installation of an acceptable impact absorbing surfacing material having a minimum depth as specified in Section I), inspected and maintained in accordance with Miracle's Specifications, Installation Instructions and Safety Requirements (set out in this Brochure, Brochure 200, Brochure 300, "Preventative Maintenance For Safety Sake", catalog safety tips, information and illustrations and CPSC Handbook). For specific step by step instructions on each piece of play equipment see Specification and Installation supplied with each piece of play equipment. Also, follow the CPSC Handbook on play equipment spacing, play area separation, supervision and other safety considerations.

INDEMNITY

Purchaser agrees to assemble, install, inspect and maintain the play equipment in accordance with Miracle's installation specifications and Safety Requirements (set out in Brochure 100, Brochure 200, Brochure 300, "Preventative Maintenance For Safety Sake", Catalog safety tips, information and illustrations and "U. S. Consumer Product Safety Commission Handbook For Public Playground Safety" (CPSC Handbook). Purchaser acknowledges it has complete control over assembly, installation, inspection and maintenance of the play equipment. Purchaser further agrees to indemnify and hold Miracle harmless and free of any liability for Purchaser's failure to assemble, install, inspect or maintain the play equipment in full compliance with Miracle's installation specifications, safety requirements and CPSC Handbook. This indemnity shall cover and include all Miracle's exposure to liability, judgments, settlements, damages of any kind, including punitive or exemplary damages, reasonable attorneys fees, expenses and all other costs of defense or claims handling resulting from Purchaser's failure to comply. This indemnity shall apply regardless of any finding or allegation concerning Miracle's culpability so long as it is alleged or found that an accident was caused in whole or part by Purchaser.

If there are any questions regarding the installation of this play equipment, please write or call:

MIRACLE RECREATION EQUIPMENT COMPANY
P. O. Box 420
Highway 60 And Bridle Lane
Monett, Missouri 65708-0420
(417) 235-6917 or (800) 523-4202

CONSUMER PRODUCT SAFETY COMMISSION PLAYGROUND SAFETY SUMMARY

SURFACING

All play equipment must be installed over an acceptable impact absorbing surfacing material. It is the responsibility of the playground designer, installer and operator to ensure that the size, type and depth of impact absorbing surfacing material used complies with the Consumer Product Safety Commission (CPSC) Handbook. The impact absorbing surfacing material must cover the entire "Fall Zone" area to a depth appropriate for the height of the play equipment. The "Fall Zone" is an area under and all around each piece of play equipment. See the "Fall Zone" section below for specific dimensional sizes for specific types of play equipment.

Note: Refer to the U.S. Consumer Product Safety Commission "Handbook for Public Playground Safety" for more detailed discussion of these issues.

Acceptable Surfaces
Acceptable impact absorbing surfacing materials include unitary safety surfacing such as pour-in-place rubber or rubber tile, and natural loose fill materials such as bark nuggets, wood mulch, wood chips, pea gravel and sand. Appropriate thicknesses for the Playsafe™ or Fall Saver™ materials can be obtained from your Miracle Sales Representative. For the loose fill materials listed, Miracle recommends a minimum depth of twelve (12) inches.

Unacceptable Surfaces
Unacceptable surfaces include turf, undisturbed natural ground, undisturbed compacted sand, decomposed granite, asphalt, concrete or any other hard surfacing.

CRITICAL HEIGHT

The term Critical Height is used to describe the shock absorbing performance of a surfacing material. The Critical Height for a surfacing material is defined as the maximum height from which the instrumented metal headform, upon impact, yields both a peak deceleration of no more than 200 G's and a HIC of no more than 1,000 when tested in accordance with the procedure described in ASTM F1292. Critical Height, therefore, can be considered as an approximate of the maximum fall height from which a life-threatening head injury would not be expected to occur. The surfacing material used under and around a particular piece of playground equipment should have a Critical Height value of at least the height of the highest accessible part of the equipment.

HIGHEST ACCESSIBLE PART OF EQUIPMENT

Recommendations for the "highest accessible part" for various pieces of playground equipment are as follows.

Swings:
The highest accessible part of a swing structure is the height of the pivot point where the swing's suspending elements connect to the supporting structure.

Elevated Platforms Including Slide Platforms:
Since children may climb onto or over guardrails, the highest accessible part of a platform surrounded by guardrails is the height above the playing surface of the top of the guardrail. Since protective barriers are designed to minimize the likelihood of climbing, the highest accessible part of a platform surrounded by protective barriers is the height of the platform surface above the ground.

Climbers and Horizontal Ladders:
For structures that are intended to be climbed upon, the highest accessible part is the maximum height of the structure.

Whirls:
The highest accessible part is the height above the ground of any part at the perimeter on which a child may sit or stand.

See-Saws:
The highest accessible part is the maximum height attainable by any part of the see-saw.

Spring Rockers:
The highest accessible part is the maximum height above the ground of the seat or designated play surface.

FALL ZONES

Fall zones are the areas under and all around each piece of play equipment that must be covered with an acceptable impact absorbing surfacing material (see "Surfacing" section above). The specific size of these fall zones depend upon the type of play equipment as follows:

Regular Swings:
The fall zone must extend at least 2 times the pivot point height to both the front and rear of the top rail. The fall zone must extend at least 6 feet out at each end from the swing frame legs.

Tire Swings:
The fall zone must extend at least 6 feet plus the length of the suspension members in all directions.

The fall zone must also extend at least 6 feet out at each end from the swing frame legs.

Slides:
The fall zone must extend at least 6 feet in all directions from the perimeter of the slide. Also, in front of the slide exit measuring from the point where the slide slope is reduced to 5 degrees, the fall zone must extend a total of four feet plus the height of the platform.

All other play equipment:
The fall zone must extend at least 6 feet in all directions from the perimeter of the play equipment.

STABILITY

All play equipment should be properly anchored. All footings should be stable and covered by the impact absorbing surfacing material.

DETERIORATION

Steel parts should be galvanized, powder coated or painted to prevent rust. Wood should be naturally rot and insect resistant (i.e. Redwood) or be treated to avoid such deterioration.

HARDWARE

All fasteners and connectors should not be removable without the use of tools. Lock washers, self-locking nuts or other locking means should be provided for all nuts and bolts to protect them from detachment. All "S" hooks should be closed tight, metal to metal.

SHARP POINTS, CORNERS AND EDGES

There should be no sharp points, sharp corners or sharp edges on any playground equipment. Wood parts should be smooth and have no splinters.

PINCH, CRUSH AND SHEARING POINTS

There should be no accessible pinch, crush or shearing points on playground equipment.

ANGLES

The angle of any vertex formed by adjacent components should not be less than 55 degrees unless the lower leg is horizontal or projects downwards.

TRIP HAZARDS

All anchoring devices for playground equipment should be installed below the play surface to eliminate the hazard of tripping.

STAIRWAYS AND LADDERS

Steps or rungs should be evenly spaced, including the spacing between the top step or rung and the surface of the platform. Table 1 contains recommended dimensions for: access slope, tread or rung width, tread depth, rung diameter and vertical rise for rung ladders, stepladders and stairways.

TABLE 1

Recommended Dimensions for Access Slope, Tread or Rung Width, Tread Depth, Rung Diameter and Vertical Rise for Rung Ladders, Stepladders, Stairways and Ramps.

TYPE OF ACCESS		AGE OF INTENDED USER 2 - 5 YEARS	5-12-YEARS
Rung Ladders	Slope	75°-90°	75°-90°
	Rung Width	≥12"	≥16"
	Vertical Rise (tread to tread)	≤12"**	≤12"**
	Rung Diameter	1"-1.67"	1"-1.67"
Stepladders	Slope	50°-75°	50°-75 °
	Tread Width - Single File	12"-21"	≥16"
	- Two-Abreast	*	≥40"
	Tread Depth - Open Riser	≥7"	≥3"
	- Closed Riser	≥7"	≥6"
	Vertical Rise (tread to tread)	≤9"**	≤12"**
Stairways	Slope	≤35°	≤35°
	Tread Width - Single File	≥12"	≥16"
	- Two-Abreast	≥30"	≥40"
	Tread Depth - Open Riser	≥7"	≥8"
	- Closed Riser	≥7"	≥8"
	Vertical Rise (tread to tread)	≤9"**	≤12"**
Ramps (not intended for access by the disabled)	Slope (vertical/horizontal)	≤1:8	≤1:8
	Width - Single File	≥12"	≥16"
	- Two-Abreast	≥30"	≥40"

* Not recommended for preschoolers
**Entrapment provisions apply

RUNGS

Rungs are generally round in cross-section and should have a diameter or maximum cross-sectional dimension between 1 and 1.67 inches.

HANDRAILS

Continuous handrails extending over the full length of the access should be provided on both sides of all stairways and stepladders. Handrails should be available beginning with the first step. The vertical distance between the top front edge of a step (tread nosing) and the top surface of the handrail above it should be no less than 22 inches and no more than 38 inches. The diameter or maximum cross-sectional dimension of handrails should be between 1 and 1.67 inches.

PLATFORMS

Platforms should be within ±2 degrees of a horizontal plane and openings should be provided to allow for drainage.

GUARDRAILS AND PROTECTIVE BARRIERS

Guardrails or protective barriers should be provided on platforms in accordance with the following minimum elevation recommendations. Platforms are exempt from these recommendations if a guard-rail or protective barrier would interfere with the intended use of the equipment.

Preschool Age Children:
Guardrails are acceptable for platforms greater than 20 inches and less than or equal to 30 inches high. Protective barriers should always be used for platforms that exceed 30 inches in height. The top surface of guardrails should be at least 29 inches high and the lower edge should be no more than 23 inches above the platform. The top surface of protective barriers should be at least 29 inches high.

School Age Children:
Guardrails are acceptable for platforms greater than 30 inches and less than or equal to 48 inches high. Protective barriers should always be used for platforms that exceed 30 inches in height. The top surface of guardrails should be at least 38 inches high and the lower edge should be no more than 26 inches above the platform. The top surface of protective barriers should be at least 38 inches high.

STEPPED PLATFORMS

Unless there is an alternate means of access, the maximum difference in height between stepped platforms should be 12 inches for preschool age children and 18 inches for school age children.

SLIDE PLATFORM

Slide platforms should have a minimum length of 22 inches. Slide platforms should be horizontal and have a width at least equal to the width of the slide. At the entrance to the chute there should be a means to channel a user into a sitting position. This may be a guardrail, hood or other device.

SLIDING SECTION OF STRAIGHT SLIDES

The average incline of the sliding surface should not exceed 30 degrees. Straight slides with flat open chutes should have sides with a 4 inch minimum height extending along both sides of the chute for the entire length of the inclined sliding surface.

SLIDE EXIT

The exit region should be essentially horizontal and parallel to the ground and have a minimum length of 11 inches. For slides that are no more than 4 feet in height, the height of the exit region should be not more than 11 inches above the protective surface. For slides that are over 4 feet in height, the exit region should be at least 7 inches but not more than 15 inches above the protective surface.

TUBE SLIDES

The minimum internal diameter of the tube should be no less than 23 inches.

ROLLER SLIDES

Roller slides are not recommended for public playgrounds unless frequent maintenance can be guaranteed.

SINGLE AXIS SWINGS

There should be no more than two single axis swings hung in each bay of the supporting structure. Attaching single axis swings to composite structures is not recommended. Swing seats should be designed to accommodate no more than one user at any time. Wood or metal swing seats are not recommended. When measured from a height of 33 inches above the bottom of the swing seat, the distance between swings should be at least 24 inches and the distance between the swing and the support structure should be at least 30 inches. Swing hangers should be spaced wider than the width of the swing seat when occupied.

MULTI-AXIS TIRE SWINGS

Clearance between the seating surface of a tire swing and the uprights of the supporting structure should be at least 30 inches when the tire is in a position closest to the support structure. Attaching multi-axis tire swings to composite structures is not recommended.

SWINGS NOT RECOMMENDED FOR PUBLIC PLAYGROUNDS

With the exception of tire swings, swings that are intended for more than one user are not recommended. Animal figure swings are not recommended. Rope swings are not recommended. Swinging exercise rings and trapeze bars are not recommended.

CLIMBERS WITH NON-RIGID COMPONENTS

Flexible climbing devices are not recommended as the sole means of access to equipment intended for preschool age children.

ARCH CLIMBERS

Arch climbers should not be used as the sole means of access to other equipment. Free standing arch climbers are not recommended for preschool age children. The rung diameter and spacing of rungs on arch climbers should follow the recommendations for rung ladders in Table 1.

HORIZONTAL LADDERS AND HANDRING BRIDGES

The center to center spacing of horizontal ladder rungs should not exceed 15 inches. This does not apply to the spacing of the rings on handring bridges. The first handhold on either end of upper body equipment should not be placed directly above the platform or climbing ring used for mount or dismount.

SLIDING POLES

Sliding poles are not recommended for preschool age children. Sliding poles should be continuous with no protruding welds or seams along the sliding surface. The pole should not change direction along the sliding portion. The horizontal distance between a sliding pole and the edge of the platform should be at least 18 inches. The sliding pole should not be more than 20 inches away from the edge of the platform. The pole should extend at least 38 inches above the level of the platform. The diameter of sliding poles should be no greater than 1.9 inches.

CLIMBING ROPES

Climbing ropes should be anchored to a footing at the lower end.

BALANCE BEAMS

Balance beams should be no higher than 12 inches.

WHIRLS

Handholds should be provided. No components of the whirl, including handholds, should extend beyond the perimeter of the platform. The rotating platform of a whirl should not have any sharp edges. The surface of the platform should be continuous with no openings that permit a rod having a diameter of 5/16 inch to penetrate completely through the surface. Whirls should not be provided with an oscillatory (up and down) motion.

SEESAWS

The fulcrum of seesaws should not present a pinch or crush hazard. Handholds should be provided at each seating position for gripping with both hands. Handholds should not protrude beyond the sides of the seat.

SPRING ROCKING EQUIPMENT

Spring rocking equipment should be equipped with handholds and footrests. The springs of rocking equipment should minimize the possibility of children pinching either their hands or their feet between coils or between the spring and a part of the rocker.

TESTING PROCEDURES FOR C.P.S.C. HEAD PROBES & PROTRUSION GAUGES

HEAD ENTRAPMENT REQUIREMENTS FOR COMPLETELY BOUNDED OPENINGS:

When tested in accordance with the procedure below, an opening conforms to the head entrapment requirement if:

1. The opening does not admit the Small Torso Probe, or

2. The opening admits the Small Torso Probe and also admits the Large Head Probe.

An opening fails to conform to the requirement if it admits the Small Torso Probe but does not admit the Large Head Probe.

Note: Openings that have the protective surfacing as a lower boundary are exempt from this requirement and do not need to be tested.

Head Entrapment Test Procedure:

Place the Small Torso Probe in the opening with its base parallel to the plane of the opening. Rotate the probe while keeping its base parallel. If the probe penetrates the opening to a depth greater than four (4) inches, the opening has admitted the probe.

Place the Large Head Probe in the opening with its base parallel to the plane of the opening. If the probe passes through the opening, the opening has admitted the probe.

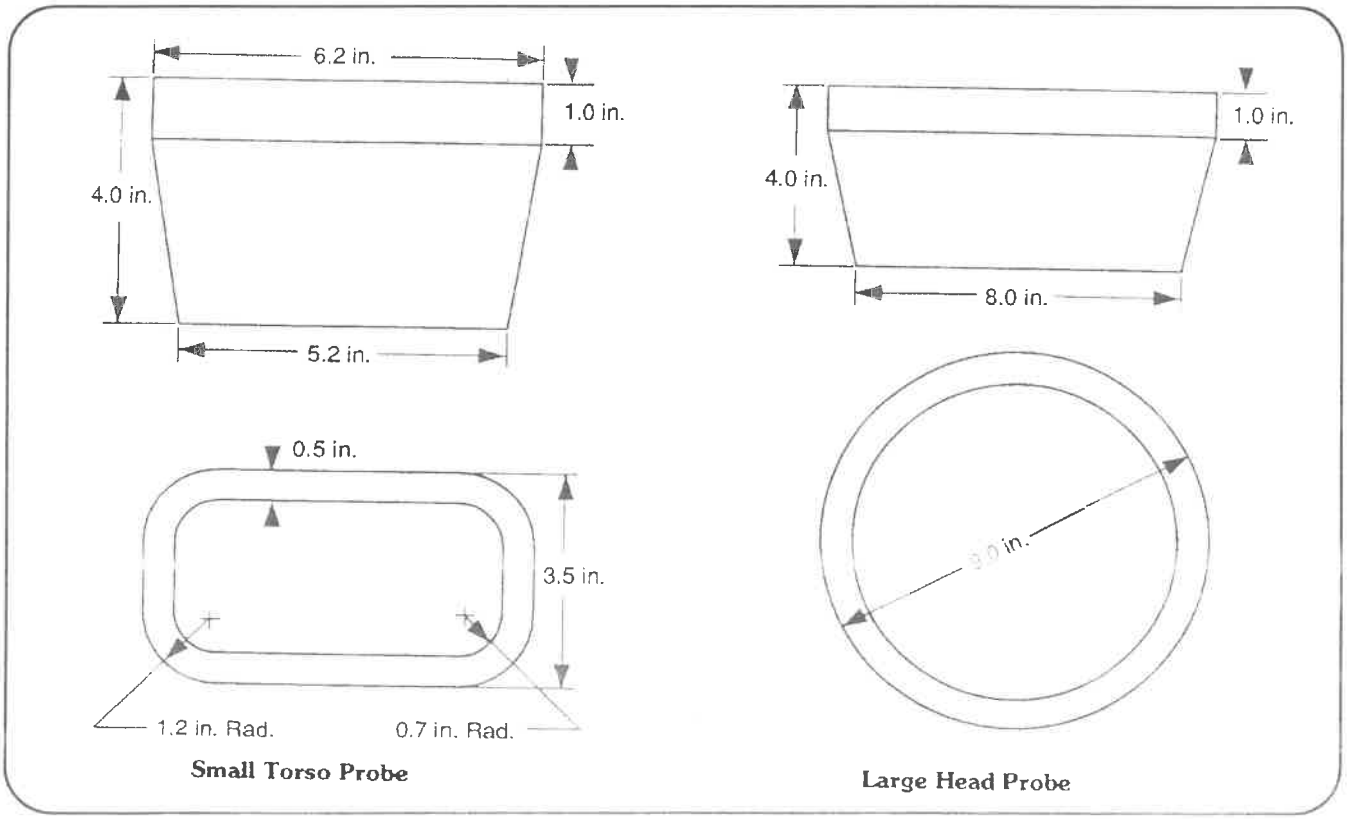

PROTRUSIONS AND PROJECTIONS

Place each protrusion gauge (small, medium and large) successively over each protrusion.

If any part of the protrusion extends past the end of any of the three gauges, then it fails the test. If no part of the protrusion extends past the end of each gauge, then it passes the test.

Additional Protrusion Test Requirements for Swing Seats:
Place the special swing seat protrusion gauge (size: 2 inches diameter by 1/8 inch thick) over each protrusion sticking out the front or the rear of the swing seat.

If any part of the protrusion extends past the end of the special gauge, then it fails the test. If no part of the protrusion extends past the end of the special gauge, then it passes the test.

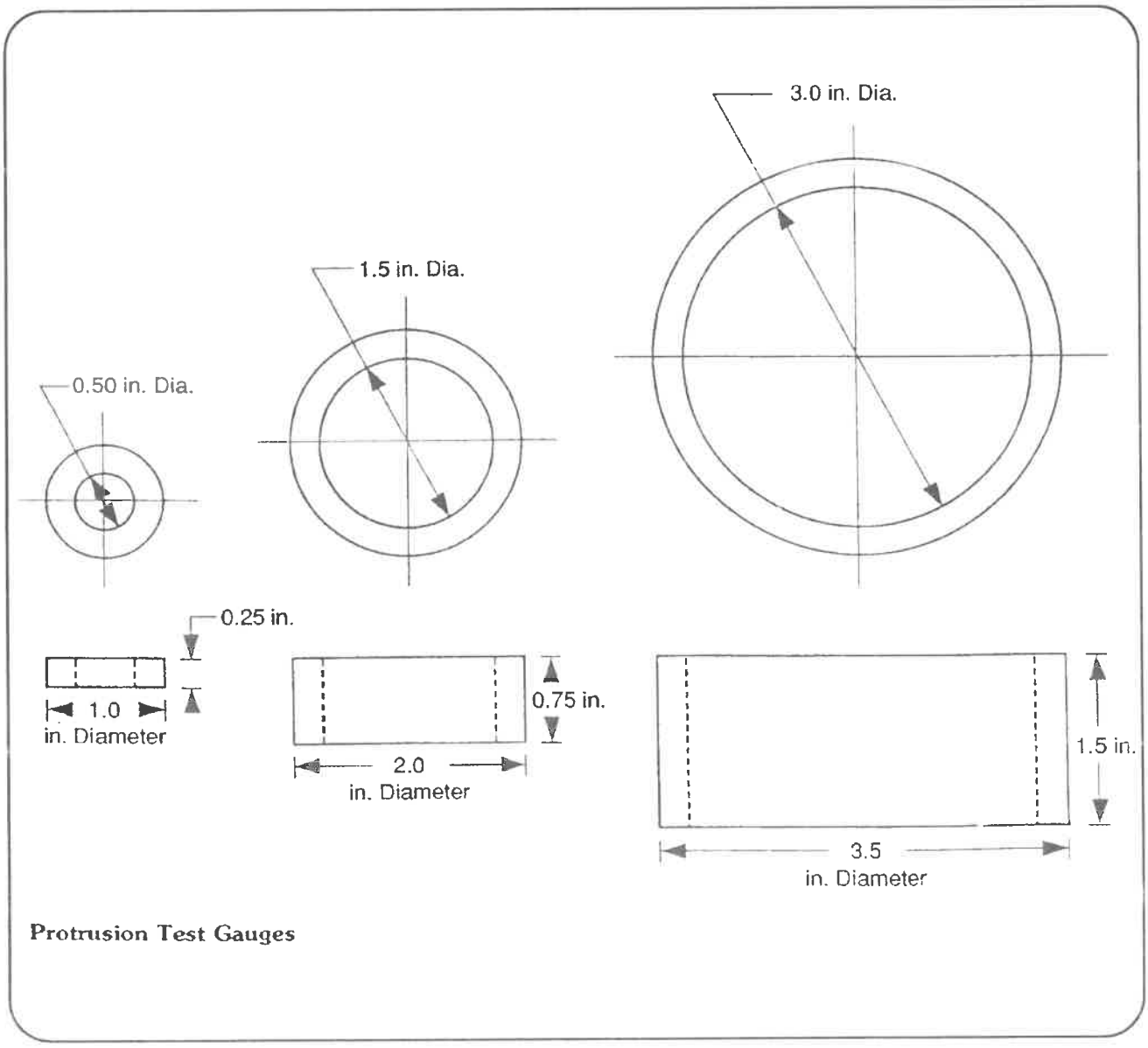

Protrusion Test Gauges

SAMPLE PLAYGROUND INSPECTION FORM

PARK/FACILITY _____ **DATE** _____

INSPECTED BY _____ **TIME** _____

PLAYGROUND SURFACE AREA	OK	IF NOT OK, COMMENTS OR ACTION TO BE TAKEN
1. Footings exposed, cracked or loose in ground?	☐	_____
2. Poor drainage areas?	☐	_____
3. Inadequate safety surface material?	☐	_____
4. Safety surface depth sufficient (12")?	☐	_____
5. Does safety surface comply with ADA?	☐	_____ YES _____ NO _____ DON'T KNOW
6. Fall zones not per CPSC (6' perimeter all directions)?	☐	_____
7. Trip hazards, tree roots or rocks in play area?	☐	_____
8. Broken glass, trash or foreign objects in play area?	☐	_____
9. General condition/appearance of play area?		_____ GOOD _____ FAIR _____ POOR
PLAY STRUCTURES		
1. Broken supports or anchors?	☐	_____
2. Pipe ends missing plugs or caps?	☐	_____
3. Broken or missing rails/rungs/steps?	☐	_____
4. Protruding bolt heads or threads?	☐	_____
5. Loose, missing, worn or rusted bolts/nuts/ or other fasteners?	☐	_____
6. Broken clamps?	☐	_____
7. Peeling or chipped paint?	☐	_____
8. Entrapment/pinch or crush points	☐	_____
9. Vinyl coated decks/platforms/steps have visible cracks or peeling?	☐	_____
10. Excessive wear of any component/slide/part?	☐	_____
11. Splintered/checking or warped wood?	☐	_____
12. General condition/appearance?		_____ GOOD _____ FAIR _____ POOR
SWINGS		
1. Broken, twisted, worn, rusted chain?	☐	_____
2. Inadequate (Non-commercial/"4-0") chain?	☐	_____
3. Worn, rusted or broken swing hangers?	☐	_____
4. Open worn or rusted "S" hooks?	☐	_____
5. Grommets show wear or rust?	☐	_____
6. Missing, worn or cracked swing seats?	☐	_____
7. Inadequate fall zone around swings?	☐	_____
8. Swing frame damaged?	☐	_____
9. Swing frame loose in footing?	☐	_____
10. Swing chain wrapped around toprail?	☐	_____
11. Safety surface worn or scattered?	☐	_____
12. Loose, missing or protruding bolts?	☐	_____
13. General condition/appearance?		_____ GOOD _____ FAIR _____ POOR
SLIDES		
1. Slide bedways have any imperfections?	☐	_____
2. Handrails loose or missing?	☐	_____
3. Steps broken or missing, or flaws/cracks?	☐	_____
4. Sit down transition platform present?	☐	_____
5. Safety rails or sit down canopy at bedway entry present?	☐	_____
6. Slide exit parallel to ground?	☐	_____
7. Safety surface at slide exit worn away?	☐	_____
8. Fall Zone adequate on all sides?	☐	_____
9. General condition/appearance?		_____ GOOD _____ FAIR _____ POOR

SAMPLE PLAYGROUND INSPECTION FORM

	OK	IF NOT OK, COMMENTS OR ACTION TO BE TAKEN
TIRE SWING		
1. Swing header too short?	☐	_____
2. Swivel assembly exposed (boot missing)?	☐	_____
3. "S" hooks or chains defective?	☐	_____
4. Tire worn, cut or broken?	☐	_____
5. General condition/appearance?	☐	_____ GOOD _____ FAIR _____ POOR
FREESTANDING CLIMBERS/MONKEY BARS		
1. Not free-fall design?	☐	_____
2. Loose or broken rails or rungs?	☐	_____
3. Need painting?	☐	_____
4. Missing bolts or fasteners?	☐	_____
5. Adequate safety surface and fall zone?	☐	_____
6. General condition/appearance?		_____ GOOD _____ FAIR _____ POOR
WHIRLS/MERRY-GO-ROUND		
1. Loose or missing fasteners?	☐	_____
2. Handrails secure?	☐	_____
3. Deck sections and center plate secure?	☐	_____
4. Underside of deck edge sharp?	☐	_____
5. Bearings worn/need replacing?	☐	_____
6. Whirl stable?	☐	_____
7. Rut around whirl?	☐	_____
8. General condition/appearance?		_____ GOOD _____ FAIR _____ POOR
SPRING RIDERS		
1. Coil or "C" Spring loose?	☐	_____
2. Coil or "C" Spring broken?	☐	_____
3. Spring Rider broken?	☐	_____
4. General condition/appearance?		_____ GOOD _____ FAIR _____ POOR
SEE-SAW/TEETER-TOTTER		
1. [illegible]	☐	_____
2. See-Saw board broken?	☐	_____
3. See-Saw seats or handles missing?	☐	_____
4. Adequate cushioning under seats area?	☐	_____
5. General condition/appearance?		_____ GOOD _____ FAIR _____ POOR

SAMPLE PLAYGROUND INSPECTION FORM

	OK	IF NOT OK, COMMENTS OR ACTION TO BE TAKEN
MISCELLANEOUS ITEMS FOR GENERAL MAINTENANCE & INSPECTION		
1. Bleachers	☐	_____
2. Player benches	☐	_____
3. Basketball backboard, rim, nets*	☐	_____
* Backboards should extend at least 32" from support post (so players don't run into post doing lay-ups or rebounding)		
4. Picnic tables - seats and tops	☐	_____
5. Park benches	☐	_____
6. Grills	☐	_____
7. Drinking fountains	☐	_____
8. Soccer goals and nets	☐	_____
9. Baseball and softball backstops and fencing	☐	_____
10. Baseball and softball bases and equipment	☐	_____
11. Outdoor volleyball posts and nets	☐	_____
12. Playground timber edging	☐	_____
13. Trash containers	☐	_____
14. Park shelters and gazebos	☐	_____
15. Outdoor exercise equipment and signage	☐	_____
16. Park gates	☐	_____
17. Park signage	☐	_____
18. Parking blocks	☐	_____
19. Area clear of glass, cans, litter?	☐	_____
20. Any vandalism/graffiti?	☐	_____
21. Maintain surfacing under equipment	☐	_____
22. Check and clean restrooms regularly	☐	_____
23. Overall general appearance of park/facility		_____ GOOD _____ FAIR _____ POOR

PLAYGROUND SITE PREPARATION TIPS

- **STEP ONE**
  Ground Preparation: excavation, drainage
  Barrier to hold surfacing: Earth berm, tie walls, or concrete

- **STEP TWO**
  Installation of equipment

- **STEP THREE**
  Safety Surfacing Materials:
  Rubber surfacing, shredded tires, pea gravel, wood chips, sand

INSTALLATION OPTIONS

- **OPTION A:**
  Many of our Sales Representatives can provide a supervisor to work with your installation crew, available on a per day basis.

- **OPTION B**
  Installation of playground equipment only.

- **OPTION C**
  Installation of playground equipment plus any landscaping work required and installation of surfacing materials.

RECOMMENDATIONS FOR LOOSE FILL SURFACING

It is the recommendation of Miracle Recreation Equipment Company along with many of Miracle's specifiers and customers that the surfacing material used under play equipment be a minimum depth of twelve (12) inches. (See ***Safety Brochure 100**, page 5*)

Depending on the height of the equipment and the surface material used, a twelve (12) inch material depth should allow for a fall greater than will be seen under normal conditions and situations.

Miracle also recommends that a maintenance schedule be implemented to regularly re-level the surface material to maintain a uniform depth under and around the play equipment, especially in high-traffic areas (slide exits, beneath swing seats, and at the base of climbing activities).

The finished twelve (12) inch surface depth should allow for any compaction or settling that may occur between regular surfacing maintenance and will help ensure your playground equipment will have an appropriate depth of surface material in accordance with the Consumer Product Safety Commission guidelines.

If you have any further questions, please contact your Miracle Recreation Equipment Company Representative (listed in the back of this "Read Me First" document) to discuss your surfacing options further.

The Critical Heights shown in the table below may be used as a guide in selecting the type of loose-fill materials that will provide the necessary safety for equipment of various heights. There may be other loose-fill materials such as bark nuggets or shredded tires that have shock absorbing properties equivalent to those in the table below. However, no tests have been conducted on these materials by CPSC staff.

Critical Heights (in feet) of Tested Materials

	Uncompressed depth			Compressed depth
Material	**6 inch**	**9 inch**	**12 inch**	**9 inch**
Wood Mulch	7	10	11	10
Double Shredded Bark Mulch	6	10	11	7
Uniform Wood Chips	6	7	>12	6
Fine Sand	5	5	9	5
Coarse Sand	5	5	6	4
Fine Gravel	6	7	10	6
Medium Gravel	5	5	6	5

SAMPLE DETAILS OF PLAYGROUND SAFETY SURFACING INSTALLATION AND PREPARATION

Typical detail for installation of wood fiber type safety surface

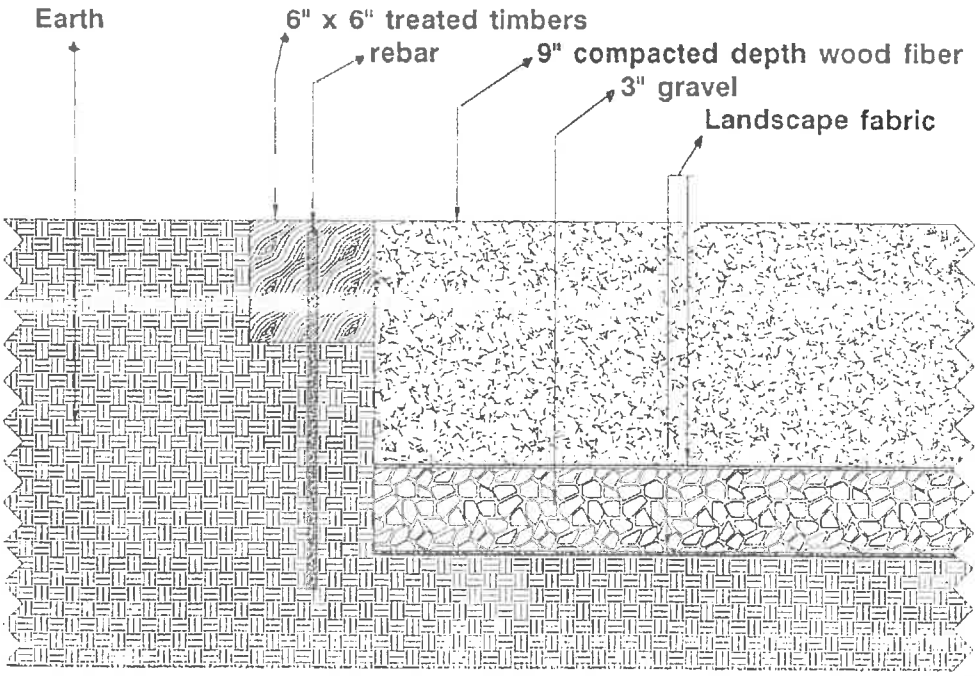

Typical detail for installation of a loose fill type of safety surface (sand, pea stone, loose rubber)

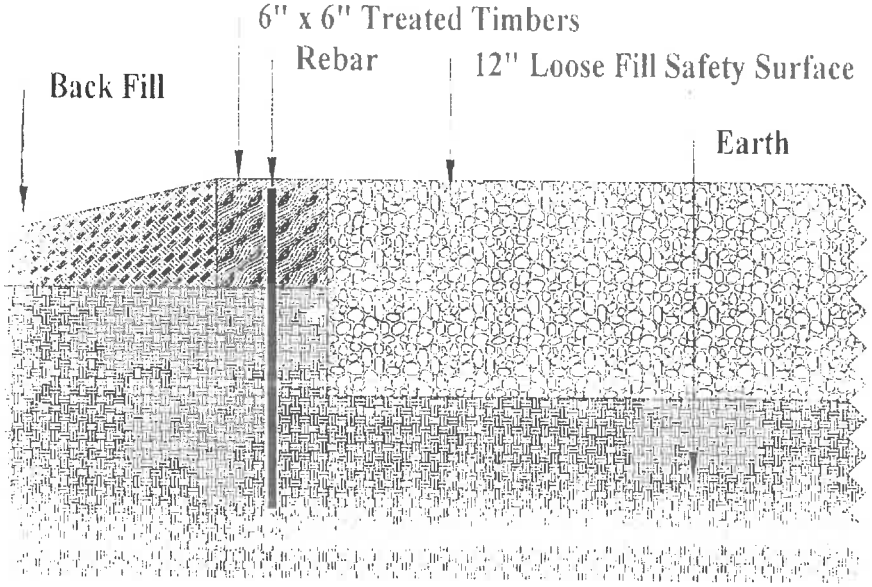

RECOMMENDED EQUIPMENT FOR INSTALLATION OF A MIRACLE PLAYSYSTEM

MINIMUM EQUIPMENT

1. Concrete - 80 pound bags (Concrete must be 3000 psi minimum strength)
   A size holes = three (3) 80 lb. bags
   B size holes = one (1) 80 lb. bag
   C size holes = ten (10) 80 lb. bags
2. Dow Flake (100 lb. bag per 30 bags of concrete)
3. Patio Block, 2" x 8" x 16" (one (1) block per every two (2) footing holes)
4. Concrete mixer and wheelbarrel or 5 gallon bucket(s).
5. Power source, electrical cord (25', 50', 100', long enough to reach work area), electrical gang box (4 plug), generator if no power source available
6. Water Source, Hose, and Nozzle (to reach work area)
7. Shovels (Spade)
8. Post hole diggers
9. Step ladders: 6' and 8'
10. Hand tools: Hammers (standard & rubber), Rachet/Socket wrenches (at least 2 sets), Sockets (socket sizes 7/16", 1/2", 9/16", 5/8", 3/4"), screwdrivers, Allen head wrenches and sockets, tape measure, levels (one 4' and two magnetized 9" torpedo levels, drift pins, vice grips, open end wrenches 7/16" to 3/4"
11. Power hand tools: Drills and various sized titanium Drill Bits for metal surfaces, Impact wrench
12. Wooden stakes and moving straps
13. Equipment to lift Cyclone and Thunderbolt slides in place (See below.)
14. Access to restroom facilities
15. Six (6) or more adult volunteers

OPTIMUM OPTIONAL EQUIPMENT

Transit
Power Cement Mixer
Trailer to move equipment if not on site
"S" Hook pliers for closing "S hooks
Powered Post Hole Diggers

FIRST CHOICE - Bobcat* with 12" & 18" post hole auger and 2' extension

SECOND CHOICE - Backhoe* with auger attachement

This equipment can also be used to lift a Cyclone (Spiral) slide and Thunderbolt (Tube) slide in place.

SELF DRILLING AND THREAD CUTTING SCREWS

Fasteners in parts cartons listed as tamper resistant self drilling screws may be substituted with a tamper resistant thread cutting screw. For ease of installation, both fastener types require that a 3/16" pilot hole be pre-drilled in the attachment surface (i.e., deck post) before installation of screw.

LOCKING FASTENERS FOR ALL PLAYSYSTEMS

All fasteners used in Miracle playground systems are now locking. This is accomplished in a variety of ways including Nylon self locking nuts, bolts with internal nylon plugs or beads, pre-applied patches of Loktite™ style locking compound or internal tooth lock washers.

Part listings in the installation instructions may not yet reflect the different or additional parts required to implement the above fasteners. The fastener size and length will be correct and if it does not have an integral locking mechanism on either the bolt or nut, there will be a lock washer supplied for use with that fastener.

If you must replace one of the supplied fasteners locally, you must obtain a similarly locked fastener, substitute one of the other locking methods listed above or apply Loktite style locking compound to the replacement fastener.

CLAMPS AND HARDWARE FOR THE LOKVILLE™ PLAYSYSTEM

ATTENTION

The Lokville clamps and hardware for the Lokville clamps have been removed from the parts cartons as listed in the installation instructions. The correct quantity of Lokville clamps for your particular Lokville playsystem have been sent in separate boxes.

PREVENTIVE MAINTENANCE TIPS FOR CLEANING SURFACES

Miracote™ powdercoated surfaces and Permaguard™ painted surfaces:
Clean with detergent and water. Thoroughly rinse with water and allow to dry. Apply a coat of high quality automotive wax.

Rockite™ polyethylene surfaces:
Clean with detergent and water. Thoroughly rinse with water and allow to dry.

Miratherm™ PVC-coated surfaces:
Clean with detergent and water. Thoroughly rinse with water and allow to dry.

Gelcoated fiberglass surfaces:
Clean with detergent and water. Thoroughly rinse with water and allow to dry. Apply a coat of high quality automotive wax.

Waterslides and pool slides:

1. Waterslides and pool slides are subject to many corrosive elements, such as pool chemicals which can induce fading, rust, paint flaking.

2. Miracle strongly recommends that both pool and waterslide understructure, stairs, railings, and platforms be rinsed with fresh water daily. This will help clean the accumulated pool chemicals, dirt, oil, etc. It will also provide the opportunity to have a visual inspection of the pool slides.

3. A daily maintenance record should be kept for warranty purposes.

For all surfaces:
Graffiti and other vandalism marks may be removed by using either acetone or "GOOF OFF" cleaner which are available commercially. Follow the instructions provided with the product.

Fall Saver Safety Cushioning On-Site Cleaning Guidelines
Fall Saver Safety Cushioning, in most cases, does not require cleaning on a regular basis; however, some owner's may desire regular cleaning for the purposes of maintaining the aesthetic appearance of the play area. The following recommendation apply for these purposes.

General Cleaning Recommendations:
Saturate entire playing surface with warm or cool water. Using a suitable cleaning device, such as a sponge mop, clean area as needed with mild soap and warm water. Use a soft bristle scrub brush for difficult areas. Do not use any solvents or bleaches or any cleaning solutions that are deleterious to rubber products. Thoroughly rinse the area after cleaning.

General Cleaning Recommendations for the Food Service Industry:
The same recommendation apply that are noted in our General Cleaning Recommendations. However, most facilities in the food Service Industry desire a more thorough cleaning than previously outlined. For these facilities it is recommended that a steam cleaner should be used in similar application as noted above using only a mild cleaning solution, containing no solvents or bleaches, in combination with the steam cleaner. Care should be taken that the pressure nozzle of the steam cleaner is held sufficiently away, approximately 18" - 24", so that the high pressure associated with steam cleaning does not damage the playing surface of the rubber. For the most difficult areas, a soft bristle scrub brush may be used. Thoroughly rinse the area after cleaning.

PLAYGROUND INSPECTION/MAINTENANCE AND REPAIR GUIDELINES

"The majority of playground injuries are a result of falls from the equipment to the surface below".

1. Never use concrete, asphalt, grass or compacted earth beneath and/or surrounding playground equipment. Always use a resilient, energy-absorbing material. The more resilient it is, the less likely an injury to the user who falls from the equipment.

2. The minimum dimensions of the fall zone around each play apparatus (except swings and slide exits) is 6 feet in each direction.

3. Swings fall zones must extend at least two (2) times the pivot height to both the front and rear of the top rail. The fall zone must extend at least six (6) feet out at each end from the swing frame legs.

The buyer/owner is responsible for maintenance of the equipment they have purchased.

1. A good preventive maintenance schedule can reduce accidents on public playgrounds.

2. Inspect your playgrounds and playground equipment on a regular scheduled basis.

3. Check your playground(s) for hazardous conditions. Equipment should be inspected for such things as loose or protruding bolts, missing hardware, damaged seats, open "S" hooks or chains, wear of chains, broken parts and splintering of wooden surfaces.

4. All debris and litter including broken glass, stones, bottles, cans, etc. should be removed.

5. Loose fill safety surfacing requires periodic raking to retain resilience in high use areas.

6. Playgrounds should be supervised at all times when children are present.

7. Playground supervisors should not allow children to use equipment incorrectly (i.e. running up slides, climbing on top of horizontal ladders or hand ring bridges, jumping out of swings, etc.)

8. Playground equipment should be installed to allow for safe transition between play apparatus.

9. Playground equipment should always be installed according to the manufacturers specifications.

10. A regular playground inspection schedule can be established equal to the use and location factors of the park or playground. Certain playgrounds could require daily inspections, others may require only weekly inspections.

PLAYGROUND EQUIPMENT REPAIR TIPS

To Repair Miracote™ (Powdercoated) Surfaces:
Using fine grade sandpaper, sand the area to be painted. Clean and dry this area after sanding. If necessary, cover adjacent areas to protect them from over spray. Apply Miracle spray or brush on touch-up paint and allow to dry thoroughly between coats.

To Repair Rockite™ (Polyethylene) Surfaces:

1 Obtain a Rockite repair patch in the correct matching color from Miracle Recreation Equipment Company.

2 Cut out around the damaged Rockite area and then cut a patch that will fit snuggly into the area just cut out.

3. Insert the patch into the hole. Using a small propane torch, heat very slowly along the edge of the patch, (about 1/4" on either side of the patch line). The Rockite will get hot and shiny, and will fuse together.

4. While the area around the patch is still hot, take a putty knife and smooth out the seam along the edge of the patch. Be sure to heat the putty knife before using it so the Rockite will not stick to the putty knife.

5. To bring the patch back to its original color, lightly sand the area with fine sand paper and then run the torch over the area lightly to bring back the sheen.

To Repair Miratherm™ (PVC) Coated Surfaces:

1. Obtain a bottle of Miratherm patch in the correct matching color from Miracle Recreation Equipment Company.

2 Be sure that the Miratherm area to be repaired is thoroughly clean and dry.

3. Apply the Miratherm patch material to the area to be repaired. Work the patch material into this area until the patch is blended in. Smooth the surface so it is flush with the surrounding material.

4. Allow the Miratherm patch to dry thoroughly: approximately 24 hours.

POURED-IN-PLACE SURFACING REPAIR TIPS

CAUTION: The Polyurethane Binder is a toxic substance and should be handled properly. Please read the *Poured-In-Place Surfacing Products Guidelines* and *Material Safety Data Sheet* (included with the repair kit) before handling this product.

Tools Needed	Materials Supplied
Rubber Gloves	Rubber Granules
Cement Trowel	Polyurethane Binder
Utility Knife	
Small Paint Brush (1" to 1-1/2")	
Plastic Sheet (approx. 4' x 4')	
Hand Broom or Bristle Brush	
Wheelbarrow (for larger repairs)	

1. Temperature must be above 50° F for at least two consecutive days.

2. Using a utility knife, cut away any torn or loose materials from the damaged area.

3. Damaged area should be broom cleaned and free of any loose materials.

4. Using a small paint brush or other similar applicator, brush a light film of polyurethane binder onto the area to be patched. Do not extend this primer coat ontothe top of the existing surface; it should only be applied to the area that the patch material will be bonding to.

5. Using your rubber gloved hands, mix the Rubber Granules with the Polyurethane Binder on the plastic sheet or plastic lined wheel barrow for larger repairs. Be sure to use all of the granules and binder; they must be mixed at this ratio for proper application. Thoroughly mix these materials until all of the granules are evenly coated with the binder. Note: You will have between 15 and 30 minutes to work with this material so be sure to prepare the damage area before mixing.

6. Using a clean cement trowel, apply mixture to the damaged area and finish to a smooth surface. On the finishing strokes, press toward the adjacent existing surface; working from the middle of the patch and pushing outward. This will provide a tight, bonded joint at the seam. For larger patches, it may be necessary to apply a thin film onto the face of the trowel. Generally, this may be necessary for patches larger than 5 square feet.

7. Restrict traffic to the patched area until the next day. In areas of very low humidity, lightly spray the patched area with water to aid the cure process.

NOTES

Miracle Sales Representatives

ALABAMA
Tudor Custom Recreation Equipment Co., Inc. - Richard/Marsha Tudor
Toll Free: (800) 469-6473
FAX: (205) 970-4121

ALASKA
School Specialties
Toll Free: (800) 478-8773
FAX: (907) 243-3243

ARIZONA
Jerry Robison & Associates
Toll Free: (800) 905-1411
FAX: (602) 816-1918

ARKANSAS
Northern: (See Oklahoma)
Southern: (See Louisiana)

CALIFORNIA
Northern:
Dale Green Associates
Toll Free: (800) 879-7730
FAX: (510) 837-6782
Southern:
Miracle Playground Sales, Inc. - Jim Spence
Toll Free: (800) 264-7225
FAX: (909) 676-8706
South Central:
Miracle Play Systems- Keith Vint
Toll Free: (800) 541-8897
FAX: (714) 736-8935
North Central:
John Edwards & Associates
Toll Free: (800) 303-7529
FAX: (408) 659-7226

COLORADO
Churchich Recreation
Toll Free: (800) 729-7529
FAX: [illegible]

CONNECTICUT
Creative Recreation, Inc.
John Hollerbach
Toll Free: (888) 844-7529
FAX: (860) 523-9998

DELAWARE
(See Pennsylvania-Eastern)

FLORIDA
Noland Associates
Toll Free: (800) 757-7529
Main Office: (407) 740-5512

GEORGIA
Norvel Hasley & Associates
Toll Free: (800) 685-2063
FAX: (706) 467-3304

HAWAII
All Quality Builders
Susan Langsner
Toll Free: (800) 480-4797
Shop: (808) 239-9446
FAX: (808) 239-4321

IDAHO (See Utah)

ILLINOIS
Northern:
Park & Recreation Supply, Inc. - Mike Schram
Toll Free: (800) 952-0962
FAX: (630) 365-1947
Southern:
(See Missouri - Eastern)

INDIANA
Indiana Recreation Equipment & Design, Inc.- Dan Downey
Toll Free: (800) 583-6483
FAX: (219) 583-6793

IOWA
Jerry Gazaway & Associates
Toll Free: (800) 798-7589
FAX: (515) 752-6604

KANSAS
(See Missouri - Western)

KENTUCKY
Anderson Recreation
Brad Anderson
Toll Free: (800) 251-5578
FAX: (502) [illegible]

LOUISIANA
Tim J Noland & Assoc., Inc.
Toll Free: (800) 733-2022
FAX: (318) 797-0465

MAINE (See Vermont)

MARYLAND & D.C. AREA
Taylor Sports and Recreation - Steve Taylor
Toll Free: (800) 286-9693
FAX: (304) 263-9392
Washington DC Area:
John Taylor
Phone: (301) 567-3888
Western Maryland Area:
Chuck Taylor
Phone: (304) 263-7857

MASSACHUSETTS
North Central (See Vermont)
Southern (See Connecticut)

MICHIGAN
Engan-Tooley-Doyle & Assoc., Inc.
Bob Tooley / Tim Doyle
Toll Free: (800) 722-8546 or
(800) 527-2172
FAX: (517) 349-1911

MINNESOTA
Miracle of Minnesota, Inc.
Jay Webber
Toll Free: (800) 677-5153
FAX: (612) 438-3939

MISSISSIPPI
(See Alabama)

MISSOURI
Eastern
Roger J. Hutchinson & Associates Inc.
Toll Free: (800) 848-5616
FAX: (314) 528-8413
Western
CDPS, Inc.
Craig L. Freerksen
Toll Free: (800) 827-3383
FAX: (816) 537-8088

NOTES

INTERNATIONAL REPRESENTATIVES

ARGENTINA

Keystone S.R.L.
Soldaddo de La Independencia
761 PB G
CP 1426 Buenos Aires,
Argentina
Ph: 54-1-777-7125
Fax: 54-1-777-7125

AUSTRIA

Miracle
Spielstatten Bedarfs GMBH
Kirchfeldstrasse
6170 Zirl, Austria
CP 1426 Buenos Aires,
Argentina
Ph: 54-1-777-7125
Fax: 54-1-777-7125

BRAZIL

Triventures Comericial & Participacoes
LTDA
Av. Brigadeirn Farnia Lima 2161-5
Sao Paulo, SP, Brazil 01451-001
Ph: 55-11-3067-47-21
Fax: 55-11-3607-47-22

CANADA
TORONTO

Parquip Distribution, Ltd.
8313 Best Road
R.R. #2
Orono, Ontario, Canada LOB 1MO
Ph: (905) 983-6345
Fax: (905) 983-5153

CANADA
SOUTH ONTARIO

3-D Fabrication
R.R. #1
Bridgen, Ontario,
Canada N0N 1B0
Ph: (519) 864-4189
Fax: (519) 864-4033

CANADA
LABRADOR CITY AND NOVA SCOTIA

Interex Systems Ltd.
28 Mews Place
Saint John's, Newfoundland, A1B 4M3
Ph: (709) 579-0027
Fax: (709) 579-0020

DOMINICAN REPUBLIC

Ferreteria Americana C. Por A
Av. San Martin, ESQ 23
Y Ave Melia #11
Santo Domingo, Republica Dominicana
Ph: (809) 549-7777
Fax: (809) 567-7063

HONG KONG

Artage Ltd.
14A Carfield Commercial Building
75-77 Wyndham St.,
Central Hong Kong
Ph: 2868-4541
Fax: 2691-8703

IRELAND

Miracle (IRL) Ltd.
23, Westside Commercial Centre
Model Farm Road
Cork, Ireland
Ph: 21-343678
Fax: 21-343671

JAPAN

Intelco, Inc.
Lions No. 5 Ohdouri
4-125 Nishi-10 Ohdouri
Chuo-Ku Sapporo
Hokkaido 060 Japan
Ph: 11-261-1026
Fax: 11-281-5405

KOREA

Kim's Limited
#176-13 Jangki-Li Kimpo-Uep
Kyunki-Do Korea
Ph: 82-341-85-4334 / 4335
Fax: 82-341-85-5448

KUWAIT

Fantasy Group
PO Box 44856
Hawalli 32063 Kuwait
Ph: 965-2664650
Fax: 965-2664651

LEBANON/EGYPT/SYRIA

Peaks
Ghosn Budg.
Zouk Mikael
PO Box 1831, Jounieh, Lebanon
Ph: 211-650 386-021
Fax: 211-651

MAYLASIA

Ausplay (M) Sdn. Bhd.
#6 Jalan
5/108 C Taman Sungai Besi
57100 Kuala Lumpur, Malaysia
Ph: 03-7810784
Fax: 781-0297

MEXICO

Juegos Infantiles Triana Sa De Cv
Av. 16 Septiembre No. 200
Col. Alfredo Bonfil
Atizapa, Edo De Mexico 52940
Ph: 52-5-370-2213
Fax: 52-5-825-0071

OMAN

Oman Technical Agencies (LLC)
PO Box 423 Postal Code 113
Muscat, Sultante of Oman
Ph: 968-605742 / 696106 / 605743
Fax: 968-601386

PHILIPPINES

Royal Galleon International
1142 Romualdez St., Paco
Manila, Philippines
Ph: 241-4131
Fax: 241-4135

POLAND

Maja Export-Import
Hertza Str 9/1
04-603 Warsaw Poland
Ph: 121-660
Fax: 613-1959

PUERTO RICO

Caribbean Equipment, Inc.
#502 Hostos Avenue
Hato Rey, Puerto Rico 00918
Ph: (809) 756-5628
Fax: (809) 751-3835

SINGAPORE

Marplan Pte. Ltd.
181-B Thomson Road
Goldhill Shopping Centre
Singapore 307627
Ph: 65-250-5488
Fax: 253-6741

SPAIN

Grd Tecnicas Ecologicas Sa
c/ Quintana, n♣ 29-3♣ Izda
Madrid, Spain 28008
Ph: 542-0143
Fax: 542-9447

TAIWAN

Aris Pioneer Co., Ltd.
No. 146, 4th Fl.,
Chung Hsin Road
Hsi-Tsu Town,
Taipei County
Taiwan, R.O.C.
Ph: 694-0652 / 0672
Fax: 2-694-0080

THAILAND

Splash International Ltd.
(Pool & Spa Company)
918 Sukhumvit 101/1
Bankchak, Prokhanong
Bangkok, 10260, Thailand
Ph: 747-8882 / 747-8883
Fax: 747-8252

UNITED ARAB EMIRATES

Al-Salman Trading Est.
PO Box 3806
Abu Dhabi
United Arab Emirates
Ph: 272-4156
Fax: 278-1479

UNITED KINGDOM

Miracle U.K. Ltd.
Old Govan Road
Renfrew Scotland PA4 8XJ
Ph: 885-1882
Fax: 885-2881

Miracle Sales Representatives

MONTANA (See Utah)

NEBRASKA
Churchich Recreational Design
Jeff Churchich
Toll Free: (800) 747-7528
FAX: (402) 496-2018

NEVADA
Northern:
(See California-Northern)
Southern: (See Arizona)

NEW HAMPSHIRE
(See Vermont)

NEW JERSEY
(See Pennsylvania - Eastern)

NEW MEXICO (See Colorado)

NEW YORK
Western Central
Joe Denzak, Jr.
Toll Free: (800) 925-1545
FAX: (315) 425-1326
Eastern & Central
Paul Labieniec & Associates
Toll Free: (800) 365-3339
FAX: (914) 462-1853
New York City & Area
Playsafe Playground Systems of NY
Sal Romanello & Associates
Toll Free: (800) 454-0008
FAX: (718) 383-2788

NORTH CAROLINA
Piedmont Parks, Inc. -
Tim Thornburg
Toll Free: (888) 288-0968
FAX: (910) 288-4707

NORTH DAKOTA
Tim Mueller
Phone: (701) 255-7571
FAX: (701) 255-7532

OHIO
Anderson Recreational
Design, Inc. - Mark Anderson
Toll Free: (800)232-PLAY (7529)
FAX: (330) 723-2356

OKLAHOMA
Miracle Recreation of Oklahoma, Inc.
Gary Fain
Toll Free: (800) 933-6484
FAX: (918) 245-5466
Little Rock, AR office
Jennifer Schueck-McCarty
Phone: (501) 224-8654
FAX: (501) 224-3845

OREGON (See Washington)

PENNSYLVANIA
Eastern
Mid-Atlantic Park &
Playground Concepts - Bill Gibbons
Toll Free: (800) 392-8736
FAX: (717) 826-8037
Western (See Maryland)
Pittsburgh Area - Mark Ford
Phone: (412) 795-0563

RHODE ISLAND
(See Connecticut)

SOUTH DAKOTA
(See Nebraska)

SOUTH CAROLINA
(See North Carolina)

TENNESSEE
(See Kentucky)

TEXAS
North Central:
Harper & Associates
Nick Harper
Toll Free: (800) 982-8973
FAX: (972) 727-7357
West Central: Wichita Falls Area
- Bill Jenks
Toll Free: (800) 598-9982
FAX: (817) 267-5879
Panhandle: (See Oklahoma)
Southeastern:
May Recreation Equipment Co.
Dave May
Toll Free: (800) 964-6301
Northern Office: (903) 838-8871
FAX: (903) 832-3402
Southern:
Park Place Recreation Designs, Inc.
Bob Ahrens
Toll Free: (800) 626-0238
FAX: (210) 805-8007
Western: (See Colorado)

UTAH
Vern Garrett & Company, Inc.
Toll Free: (800) 748-4608
FAX: (801) 263-1254

VERMONT
Pettinelli & Associates -
Robert Pettinelli
Toll Free: (800) 775-8154
FAX: (802) 860-0732

VIRGINIA
Site Concepts
R. Fort Alexander
Toll Free: (800) 568-8396
FAX: (757) 465-5739

WASHINGTON
Miracle West, Inc.
Nat Durham
Toll Free: (800) 844-0559
FAX: (206) 770-9787

WASHINGTON DC
(See Maryland)

WEST VIRGINIA
(See Maryland)

WISCONSIN
Jen Henbest & Assoc., Inc.
Toll Free: (800) 688-6504
FAX: (414) 392-3452

WYOMING
Eastern: (See Colorado)
Western: (See Utah)

INSTALLATION INSTRUCTIONS
TOP VIEW & FOOTING LAYOUT

BROOKLYN PARK, MN

DRAWING NUMBER:
21176

WORK ORDER NUMBER(S):
435141

DATE:
6/1/98
JAY WEBBER

IMPORTANT SAFETY NOTE:

IT IS THE RESPONSIBILITY OF THE PLAYGROUND DESIGNER, INSTALLER AND OPERATOR TO ENSURE THAT THE APPROPRIATE SIZE, TYPE AND DEPTH OF CUSHIONING MATERIAL IS USED. OUR TESTS HAVE SHOWN THAT A 12 INCH DEPTH OF BARK NUGGETS PROVIDES ADEQUATE CUSHIONING FOR ALL MIRACLE RECREATION PRODUCTS. THEREFORE, AS A GENERAL RULE, THE USE OF 12 INCHES OF BARK NUGGETS IN AN AREA AT LEAST 8 FEET OUT FROM THE STRUCTURE IN ALL DIRECTIONS IS SUGGESTED. (FOR MORE INFORMATION, PLEASE REFER TO THE U.S. CONSUMER PRODUCT SAFETY COMMISSION'S "HANDBOOK FOR PUBLIC PLAYGROUND SAFETY" SECTION 10 AND APPENDIX C.)

THIS PLAY SYSTEM FOLLOWS THE RECOMMENDATIONS CONTAINED IN THE U.S. CONSUMER PRODUCT SAFETY COMMISSION'S "HANDBOOK FOR PUBLIC PLAYGROUND SAFETY" REGARDING EQUIPMENT DESIGNED FOR:

SCHOOL AGE CHILDREN

THERE CAN BE LARGE DISPARITIES IN THE ABILITIES OF CHILDREN OF SIMILAR AGES. PARENTS MUST BE RESPONSIBLE FOR LIMITING THEIR CHILDREN TO THOSE ACTIVITIES THAT ARE APPROPRIATE AND SAFE FOR THEIR CHILDREN'S INDIVIDUAL ABILITIES.

MIRACLE RECREATION EQUIPMENT COMPANY
P.O. BOX 420 HWY 60 & BRIDLE LANE
MONETT, MISSOURI 65708
PHONE: 1-800-523-4202

FOOTING LAYOUT
SCALE: 1"= 5'-0"

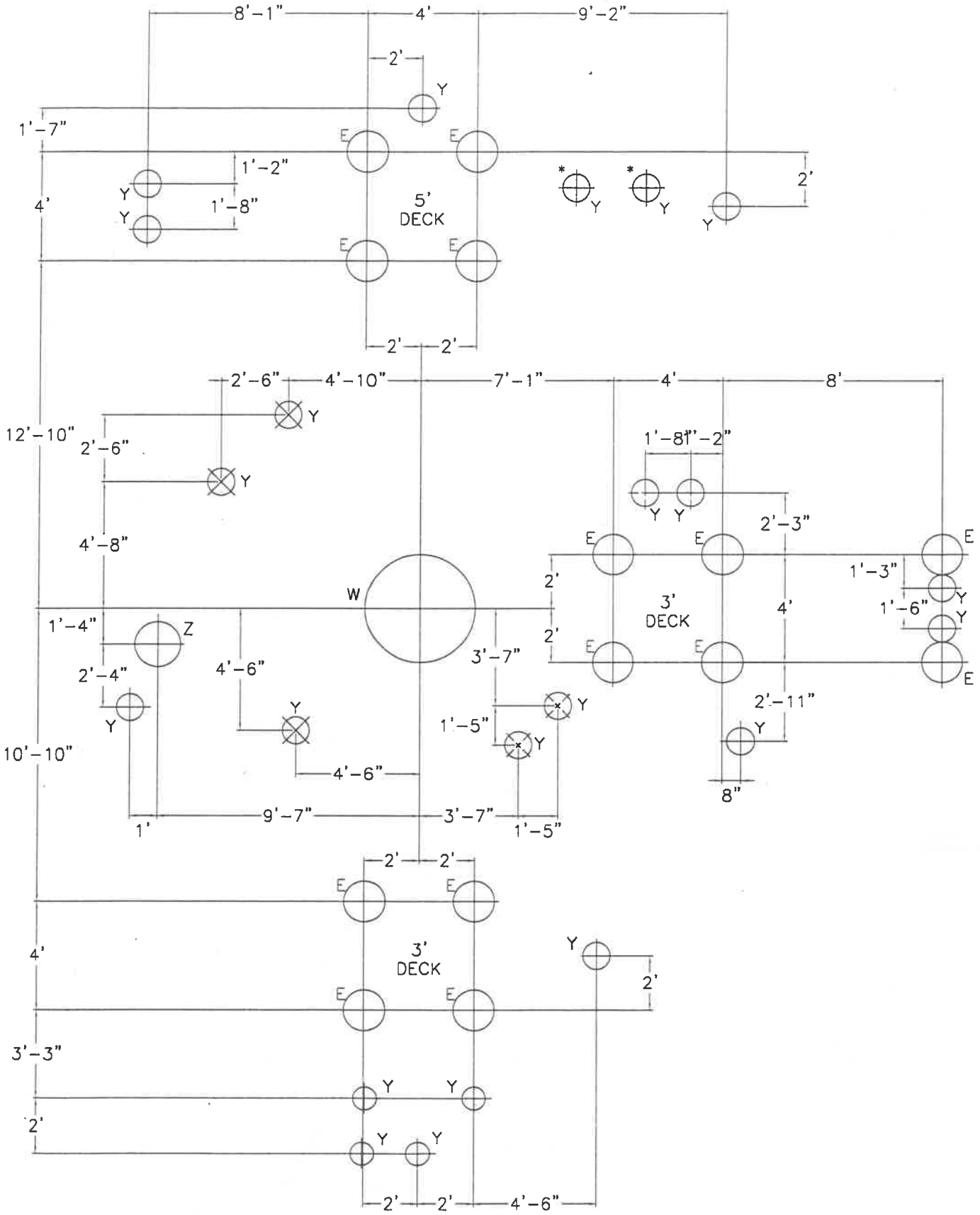

FOOTING INFORMATION

POST LOCATION:

FOOTING	MODEL	POST LENGTH
A.	714–542	136" POST.
B.	714–543	160" POST.
C.	714–544	178" POST.
D.	714–551	106" POST.
E.	714–552	136" POST.
F.	714–553	160" POST.
G.	714–554	178" POST.
H.	714–555	76" POST.
J.	714–563	157" ARCH ROOF.
K.	714–565	181" ARCH ROOF.
L.	714–566	199" ARCH ROOF.
M.	714–572	144" POST.
N.	714–573	168" POST.
P.	714–574	186" POST.
Q.	714–583	157" ARCH.
R.	714–585	181" ARCH.
S.	714–586	199" ARCH.

FOOTING SCHEDULE:

A–S. 18" DIA. X 36" DEEP.
U. 36" DIA. X 18" DEEP.
V. 42" DIA. X 18" DEEP.
W. 48" DIA. X 18" DEEP.
X. 18" DIA. X 36" DEEP.
Y. 12" DIA. X 30" DEEP.
Z. 20" DIA. X 54" DEEP.

* LOCATIONS DETERMINED ON SITE.

FOOTING NOTES:

1. THESE FOOTING SIZES & LOCATIONS SUPERSEDE THOSE SHOWN IN THE INSTALLATION INSTRUCTIONS.
2. SOME EQUIPMENT LEGS MAY NOT REACH TO BOTTOM OF FOOTINGS.

DECK & COMPONENT FOOTING DETAIL

SCALE: NONE

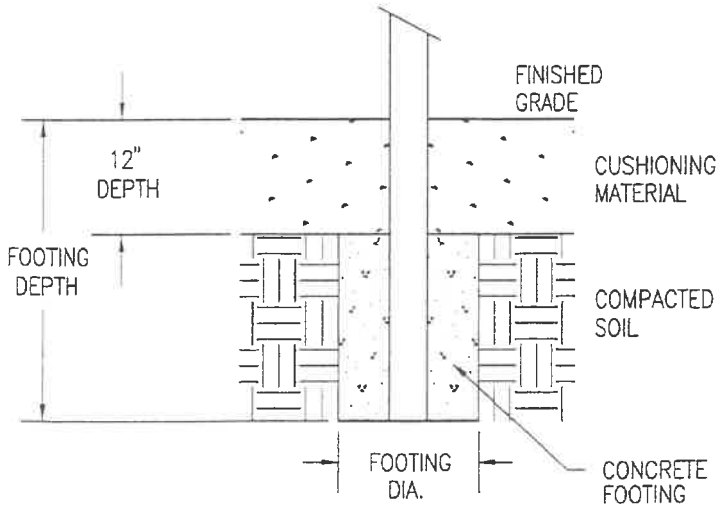

CENTER STAGE FOOTING DETAIL

SCALE: NONE

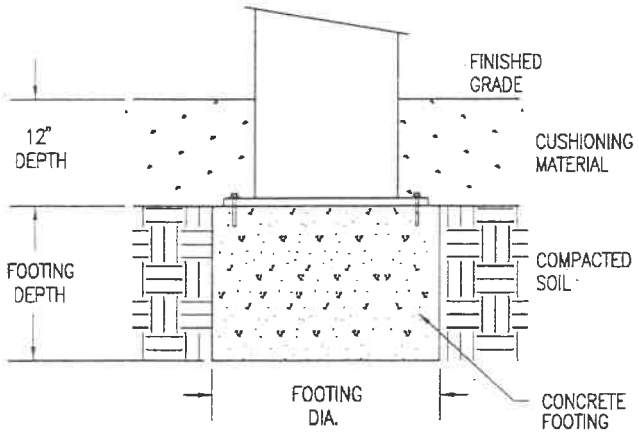

PLACEMENT OF WARNING LABEL AND MANUFACTURER I.D. LABEL

Both a Warning Label and a Manufacturers I.D. Label are provided for each deck model. Place Warning and I.D. Labels on a deck post at or near each deck access point (stairs, ramp entrys, transfer points, ladders, etc.) Each label should be positioned so it is readable by a person entering onto the deck.

APPLICATION OF WARNING AND I.D. LABELS

Prepare surface; remove any dust oil or grime from the label location area on the post. Ensure the area is dry. When area is both clean and dry, carefully peel off label from paper backing and place on post so that it is flush and flat to the plane of the post with no wrinkles or tears.

MAINTENANCE & REPLACEMENT OF WARNING AND I.D. LABELS

If label should become illegible, torn or is removed it is necessary for the owner to replace the label. Replacement labels may be obtained by calling our Customer Service Department at 1-800-523-4202, or write:

Miracle Recreation Equipment Company
PO Box 420

MIRACLE
RECREATION EQUIPMENT COMPANY

MIRACLE
RECREATION EQUIPMENT COMPANY

TORQUE CHART

SELF DRILLING SCREW

DIAMETER	RECOMMENDED TORQUE IN-LBS *
1/4	32

SET SCREW

DIAMETER	RECOMMENDED TORQUE FT-LBS *
3/8	13

BUTTON HEAD BOLT

DIAMETER	RECOMMENDED TORQUE FT-LBS *
1/4-20	5
5/16-18	10
3/8-16	17
7/16-14	30
1/2-13	45

HEX HEAD BOLT

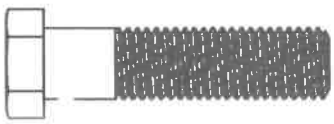

DIAMETER	RECOMMENDED TORQUE FT-LBS *
1/4-20	5
5/16-18	10
3/8-16	17
7/16-14	30
1/2-13	45

* WE DO NOT RECOMMEND THE USE OF IMPACT WRENCHES OR POWER TOOLS TO INSTALL HARDWARE.

MIRACLE
RECREATION EQUIPMENT COMPANY

Suggested Tools & Equipment
For Installation of a
MIRACLE Playsystem

- Concrete for footings
  - 2000 PSI (minimum)
  - 3000 PSI (minimum) if freezing conditions exist
- Digging equipment for footing holes (auger, Bobcat with post hole auger [optional], post hole digger, spade shovels
- Patio block, 2" x 8" x 16" (One block per every two footing holes)
- Wheelbarrow or concrete mixer with 5 gallon bucket (s)
- Water supply and garden hose
- Generator / power source
- Electrical gang box and extension cord (s) (25', 50' 100'; long enough to reach work area)
- Step ladders
- Transit (optional) or string line to aid in layout
- Saw horses
- Levels (2) 9" magnetic torpedo levels & (1) 4' carpenters level
- Two (2) tape measures
- Open end wrench set
- Allen wrenches or hex keys
- Socket set (2) sets optimum
- Screwdrivers
- Drift Pins
- Box Knife(s)
- C-Clamps & Vice Grips
- Electric Drill & various sized drill bits
- Impact wrench (optional)
- Hammers (standard and rubber mallet)
- Wooden stakes and moving straps (optional)
- Six (6) or more adult volunteers
- Equipment (crane or Bobcat) to lift larger Cyclone or Thunderbolt slides in place
- "S" hook pliers for closing "S" hooks on swings, etc.
- Felt tip pens (washable) for marking clamp locations
- Trailer to move equipment if not on site
- Access to restrooms

Important Notes

1. Before installing or erecting this equipment, please read and comply with all applicable recommendations in Safety Brochure 100 enclosed. If for some reason this brochure is missing, contact your local Miracle sales representative for a copy.

2. Before starting construction, check with all utility companies for exact locations of underground utilities.

3. When designing areas for footings and the area under and adjacent to all equipment, consideration should be given to soil types and subgrade characteristics. The purchaser and/or installing contractor will be responsible for proper installation and insuring that abnormal and unsafe compaction does not occur in these areas, which are generally recommended to be under and a minimum of 6' out from the edges of all play structures.

4. It is the purchaser's responsibility to maintain these areas properly after installation. It is recommended that compaction tests be made several times per year. When compaction occurs, it is recommended that the area affected be scarified or additional pea gravel, sand, redwood bark or coarse wood chips be added until the area is soft and resilient.

Guidelines & Tips
For the Installation of your Miracle Playstructure

Helpful Hint

Before beginning your installation, visit an existing site with a similar Miracle playstructure (contact your Miracle Sales Representative for a location). This will help you to better understand the scope of work ahead as well as familiarize you with what the installed finished product should look like.

- Review the safety information provided in your Miracle Installation Manual. Install components as instructed.

- Pre-Installation Check List:

  ✔ **SITE LOCATION** Check to be sure the site selected is large enough for your Miracle playstructure and the minimum protective area recommended in your layout plan.

  ✔ **SITE PREPARATION** Make sure all site preparation is completed including site leveling and all debris removal. Before digging any footings, inquire with local utility companies to insure there are no underground utilities.

  ✔ **DRAINAGE** Note: It is important that the sub-surface drains well to eliminate standing water. If the sub-surface does not drain naturally it must be tiled or sloped at 1/8" to 1/4" per foot to a "French Drain" or similar system. Larger Miracle Playstructures may require more than one "French Drain" to allow drainage from the center of the play area to decrease the overall slope.

- Before starting installation, study your Miracle Playstructure layout plan for the correct location of posts, deck heights, and footing information. NOTE: All footing holes are **not** the same diameter and depth. All deck posts are **not** the same length.

- Lay out all parts received and separate them by component. All parts have a part number on them that corresponds to the bill of materials list found at the back of the Installation Manual.

- **IMPORTANT**: Determine the type and appropriate depth of the protective surfacing you will be using.

  SAFETY NOTE
  Choose a protective surfacing material that has a Critical Height Value of at least the height of the Highest Accessible Part/Fall height of the adjacent equipment. (Ref. CPSC Guidelines. Section 10: Surfacing.)

- All deck heights are measured from "Finished Grade." (If deck heights are mistakenly measured from sub-grade all slides, steps, transfer points, etc. may be too low.)

- Start your installation with the largest centrally located deck. If the site is not level, determine deck height from lowest grade point.

- Dig footing holes (one deck at a time) to the proper depth and width as shown on the footing layout. Dig footing holes only as you need them, do not leave holes open overnight.

- Place a patio block half, crushed rock, or an equivalent in the bottom of each deck post footing hole, to provide a solid foundation. Allow for this in hole depth.

- Determine deck height and secure VersalokÒ Clamps and deck support brackets before uprighting posts. Do not install self drilling screws until deck is leveled and posts are plumb.

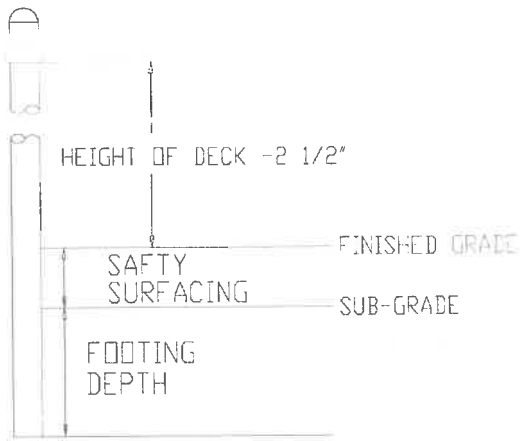

- After decks are attached to the posts, install deck enclosures to help stabilize the deck.

- Use jacks, support stands (model 1000), or bracing to help level and support decks and other components.

- Fill footings with concrete 3"-4" below sub-grade. When the concrete has hardened, backfill all footings and tamp down.

- Be sure to drill out (removing excess PVC) **only** holes in the deck edge that will be used to install a component.

- Re-tapping of threaded inserts may be necessary to remove excess paint.

- Protective surfacing material should be installed the day the equipment installation is completed.

- Add play apparatus such as swing seats, "D" rings and Balance chains only when site is ready for children (after the protective surfacing material is in place).

IMPORTANT!!

MIRACLE
RECREATION EQUIPMENT COMPANY

ASSEMBLY INSERT FOR VERSALOK® II CLAMPS & BAR SOCKET

May 1, 1998 Rev. 1.

COMPONENT OR ENCLOSURE TO CLAMP

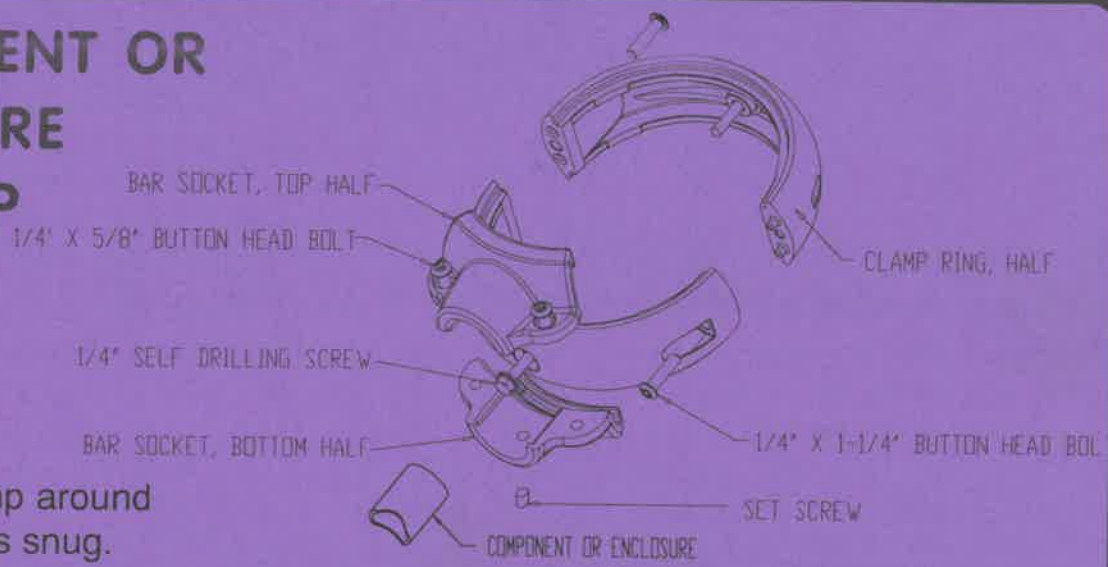

1. Assemble clamp around post so that it is snug.
2. Adjust clamp position to set and align component or deck.
3. Use 1/4" self drilling screws to secure clamp and support structure. <u>This must be done.</u>

Torque 1/4" BHD bolts in bar socket to 15ft.-lbs. Socket assembly should not be allowed to rotate around clamp.

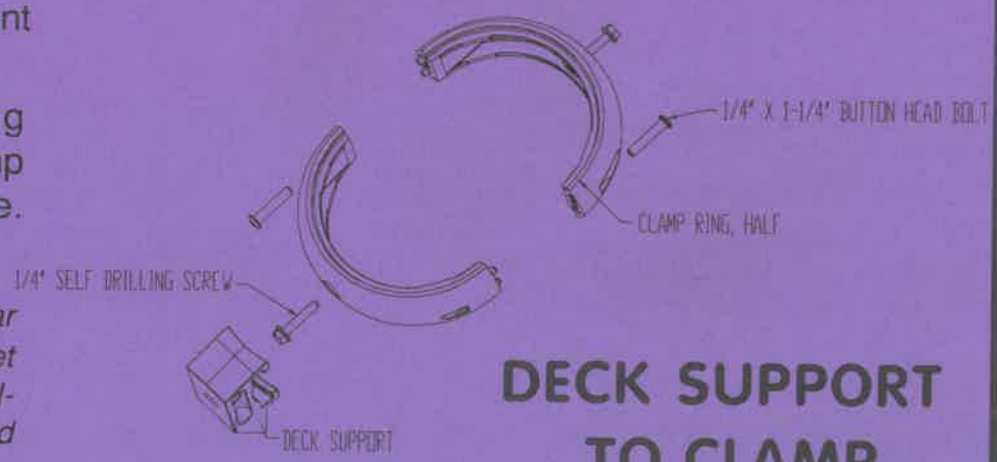

DECK SUPPORT TO CLAMP

Important Note: If a post must "share duty" (i.e., support more than one deck at the same height), all deck supports must be slid onto clamp halves before attaching the clamp assembly around the post.

MIRACLE
RECREATION EQUIPMENT COMPANY

FOOTING DETAILS FOR DECKS AND COMPONENTS

April 28, 1997 Rev. A

DECK POST FOOTING DETAIL

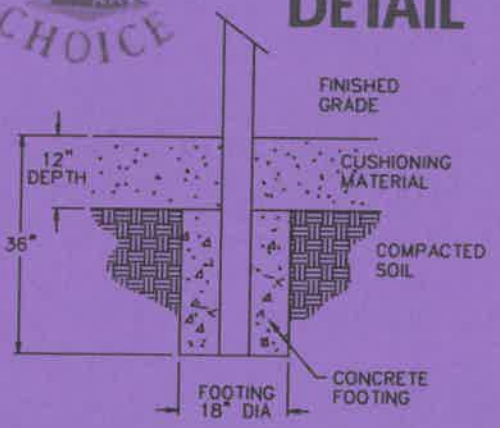

DECK PEDESTAL FOOTING DETAIL

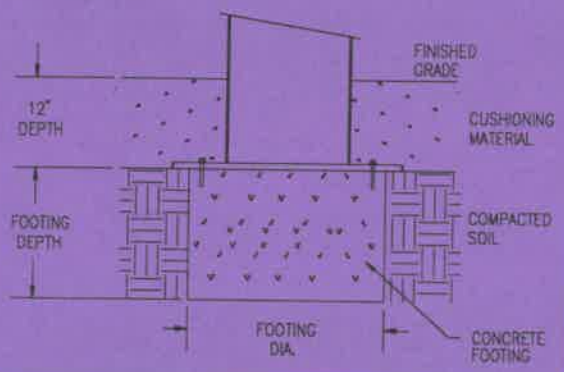

COMPONENT FOOTING DETAIL

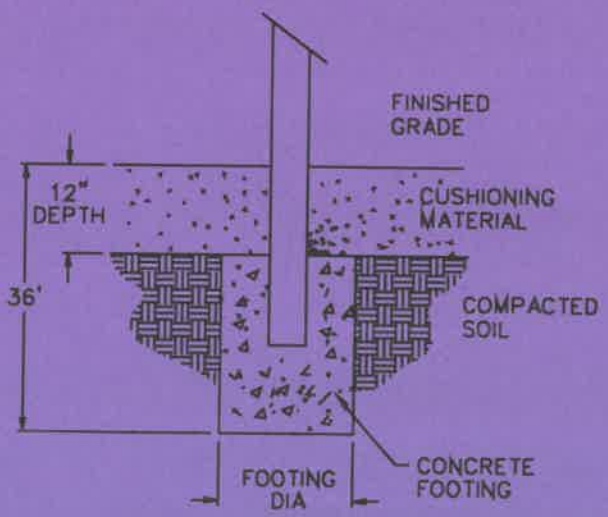

FOOTING DETAILS FOR OTHER COMPONENTS

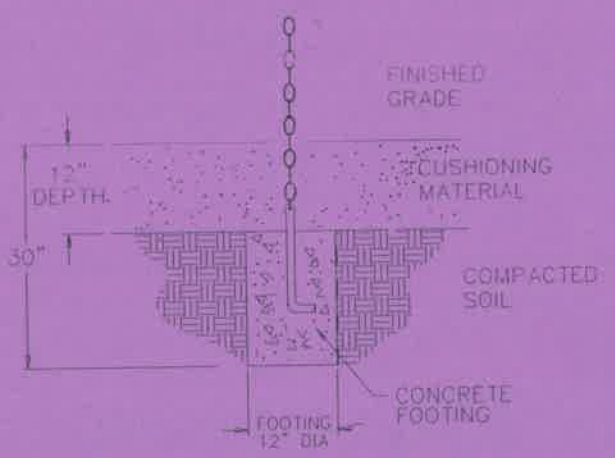

CHAIN LADDER & CLIMBING ROPE FOOTING DETAIL

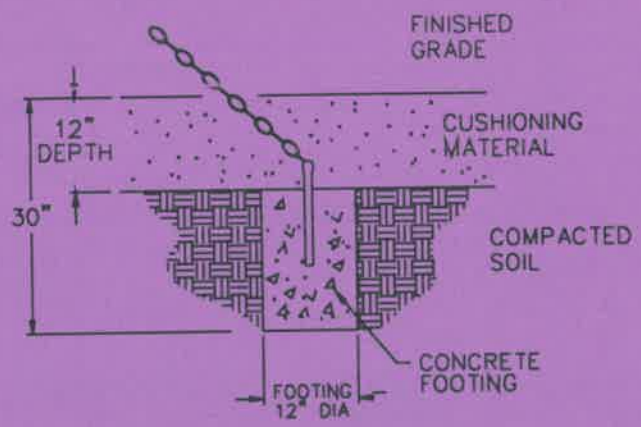

CARGO NET AND CARGO CLIMBER FOOTING DETAIL

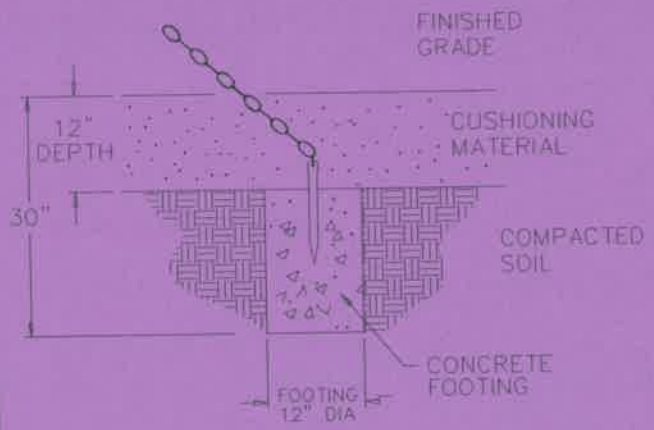

TIRE CLIMBER FOOTING DETAIL

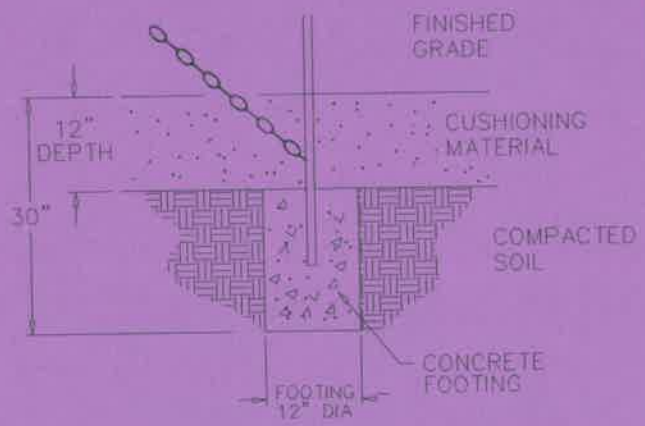

CARGO CLIMBER WITH HANDHOLD FOOTING DETAIL

INSTALLATION INSTRUCTIONS

CenterStage™ Decks for the 714 Playsystem

MIRACLE
RECREATION EQUIPMENT COMPANY

August 19, 1997 Rev. F

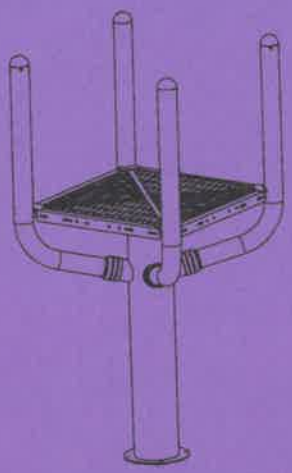

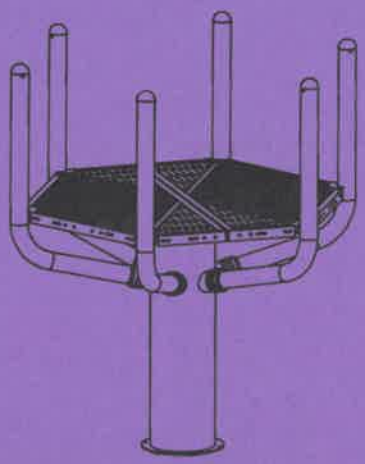

4 Sided (Square) Decks
714-524-3
714-524-4
714-524-5
714-524-6
714-524-8

4 Sided (Square) Decks for Roof Attachment
714-534-3
714-534-4
714-534-5
714-534-6
714-534-8

6 Sided (Hexagon) Decks
714-526-3
714-526-4
714-526-5
714-526-6
714-526-8

6 Sided (Hexagon) Decks for Roof Attachment
714-536-3
714-536-4
714-536-5
714-536-6
714-536-8

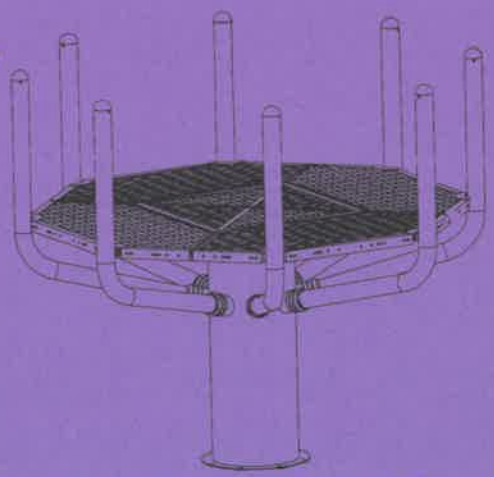

8 Sided (Octagon) Decks
714-528-3 714-528-4
714-528-5 714-528-6
714-528-8

8 Sided (Octagon) Decks for Roof Attachment
714-538-3 714-538-4
714-538-5 714-538-6
714-538-8

TOP VIEW

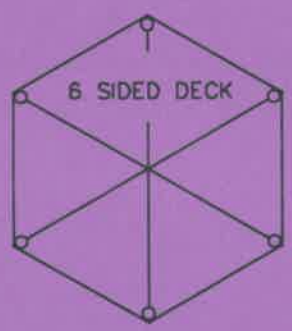

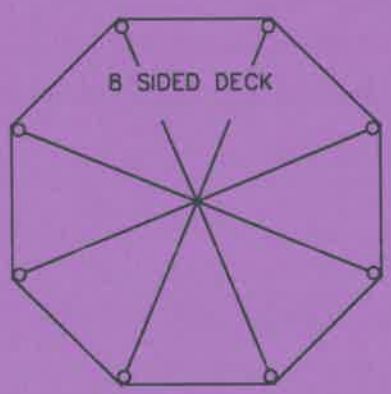

FOOTING TOP VIEW

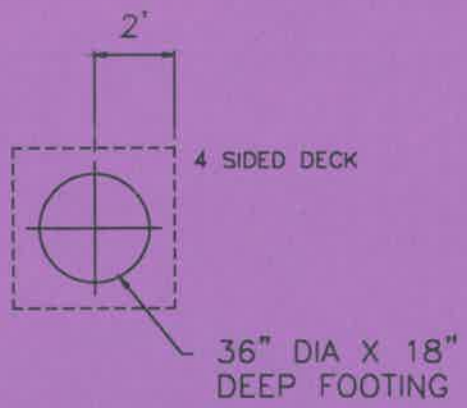

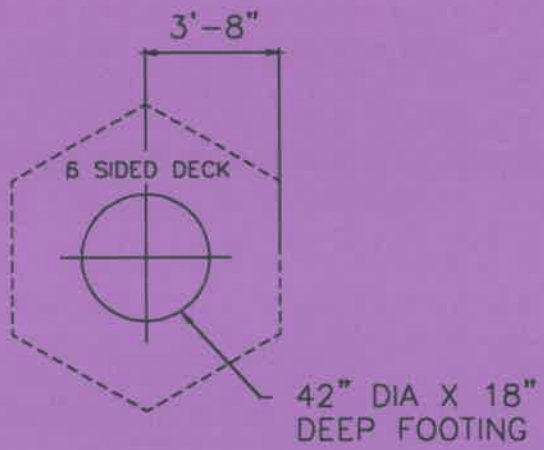

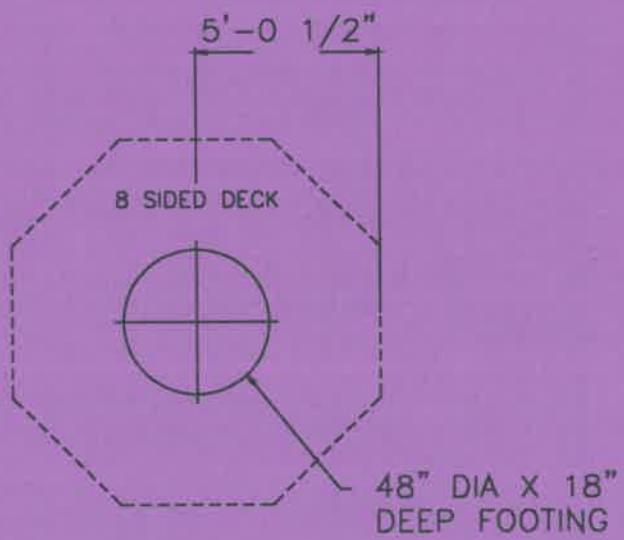

PART I. GENERAL

IMPORTANT: ***Before installing or erecting this equipment, please read and comply with all applicable recommendations in SAFETY BROCHURE 100 (enclosed). If for some reason this brochure is missing, contact your local Miracle sales representative for a copy.***

A. Ground Space Required:

4 sided decks - 4' x 4' 6 sided decks - 8' x 8' 8 sided decks - 11' x 11'

B. Concrete:

4 sided decks - .55 cu. yds. 6 sided decks - .62 cu. yds. 8 sided decks - .70 cu. yds.

PART II. IMPORTANT NOTES AND ASSEMBLY INSTRUCTIONS:

Placement of I.D. and Warning Labels

Both an I.D. label and a Warning label are provided for each deck. For 3' and 5' high decks, place I.D. and Warning Labels on a post at or near deck access point (stairs, ramp, etc.) at a distance between 3' and 5' from the top of the protective surfacing. For 6'-6" high decks, place labels on pedestal at a distance between 3' and 5' from the top of the protective surfacing if deck access post is unavailable. If deck contains more than one access point, place labels on the access point which will be most frequently used, or on access point which most directly faces the approach from the playground entrance. Each label should be placed on post surface so that it faces the user as he enters the deck.

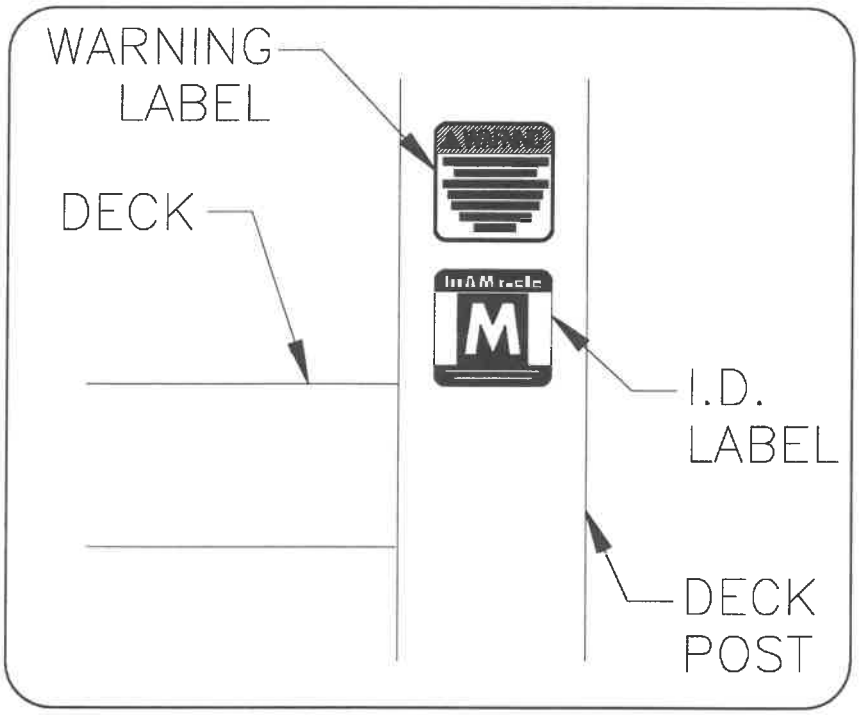

Application of I.D. and Warning Labels

Prepare surface. Remove any dust, oil, or other alien substance from the label location area on post. Ensure that area is dry. When area is both clean and dry, carefully peel off label from paper backing and place on post so that label is flush and flat to the plane of the post with no wrinkles or tears, with graphic as indicated in label detail.

Maintenance and Replacement of I.D. and Warning Labels

Inspect label regularly. If label should become torn, removed, opaqued or otherwise disfigured, replace label. Replacement labels may be obtained by contacting your local Miracle sales representative.

IMPORTANT: ***The top of all deck pedestal footings must be level and at the same height. Deck pedestal footings are to be poured and allowed to cure before beginning system installation.*** *Refer to Footing Top View Drawings for locations and sizes.*

IMPORTANT: ***Do not pour concrete for component activity footings until all components in your deck system have been installed per installation instructions, leveled, plumbed and braced in position.***

1. Before installing or erecting this equipment, please read and comply with all applicable recommendations in Safety Brochure 100 enclosed. If for some reason this brochure is missing, contact your local Miracle sales representative for a copy.

2. Before starting construction, check with all utility companies for exact locations of underground utilities.

3. When designing areas for footings and the area under and adjacent to all equipment, consideration should be given to soil types and subgrade characteristics. The purchaser and/or installing contractor will be responsible for proper installation and insuring that abnormal and unsafe compaction does not occur in these areas, which are generally recommended to be under and a minimum of 6' out from the edges of all play structures.

4. It is the purchaser's responsibility to maintain these areas properly after installation. It is recommended that compaction tests be made several times per year. When compaction occurs, it is recommended that the area affected be scarified or additional pea gravel, sand, redwood bark or coarse wood chips be added until the area is soft and resilient.

Footing Instructions

1. (Refer to *Footing Layout* and *Footing Detail*.) Dig pedestal footing. Pour concrete for the footings, being sure that the top of all deck pedestal footings are level and at the same height. Allow concrete footings to cure.

Refer to *Footing Details* Installation.

GENERAL INSTALLATION OVERVIEW

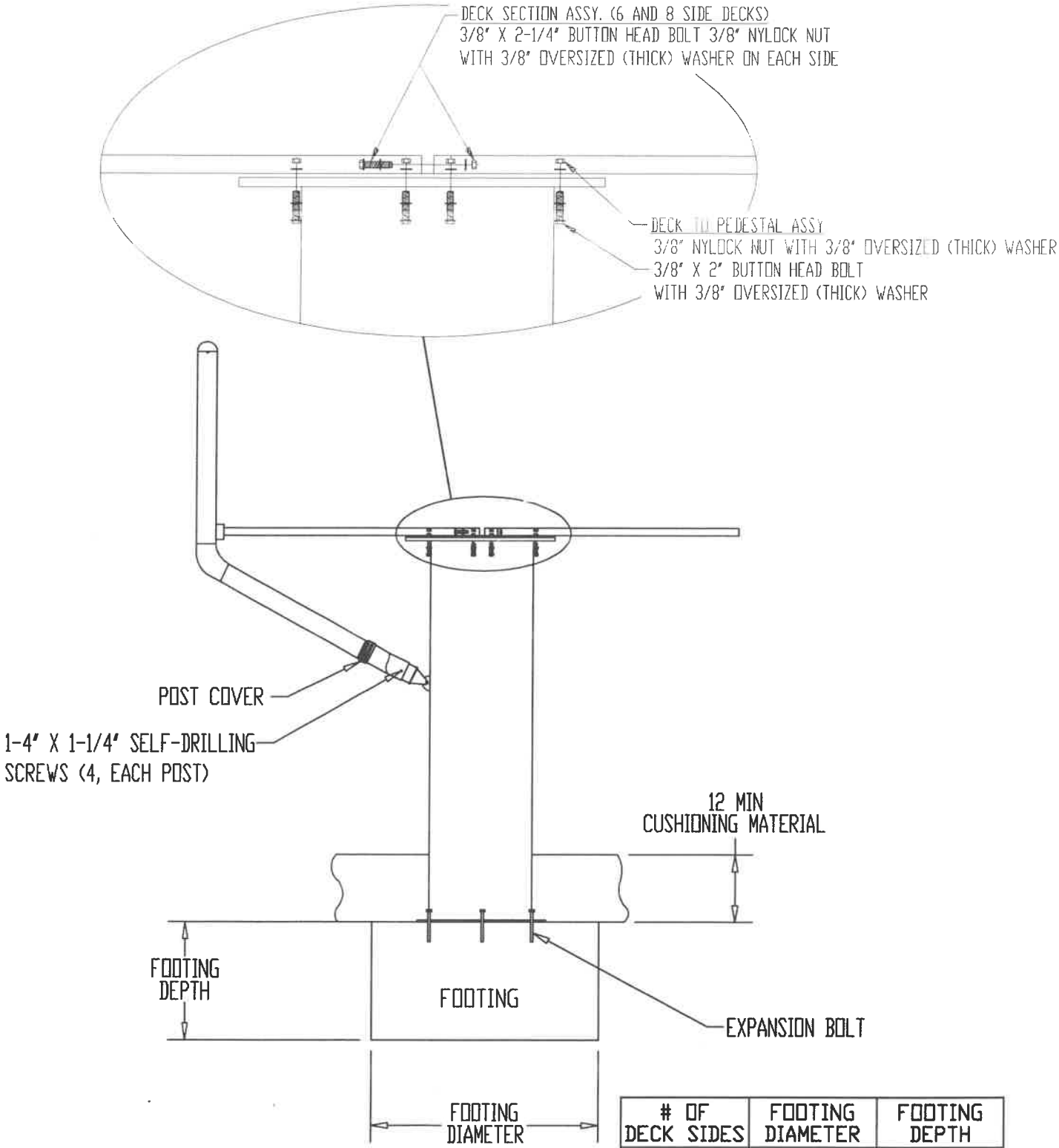

# OF DECK SIDES	FOOTING DIAMETER	FOOTING DEPTH
4	36	18
6	42	18
8	48	18

Pre-assembly Notes

It is recommended to have support stands, similar to Miracle's Model #1000 for proper assembly of 6 and 8 sided decks. Three (3) support stands are needed for 6 sided decks and four (4) support stands are required for 8 sided decks.

The assembly of CenterStage decks will require 3 people, minimum.

Pre-drill excess pvc from mounting holes along common deck section edges. At this time, do not remove pvc along edges that components mount to.

Pedestal Assembly

STEP 1	Position pedestal on concrete footing, round flange to concrete. Shim pedestal base so that pedestal is plumb. Do not anchor pedestal to footing at this point.

STEP 2	Position anchor connectors over anchor plates so that anchor plate is inserted or sandwiched in anchor, aligning holes. Attach anchor to anchor plate by bolting through using a 1/2" x 1-1/2" shoulder bolt with 3/8"-16 thread and a 3/8" Nylock nut. ***Anchor must be free to pivot.*** Repeat step for all remaining anchor connectors.

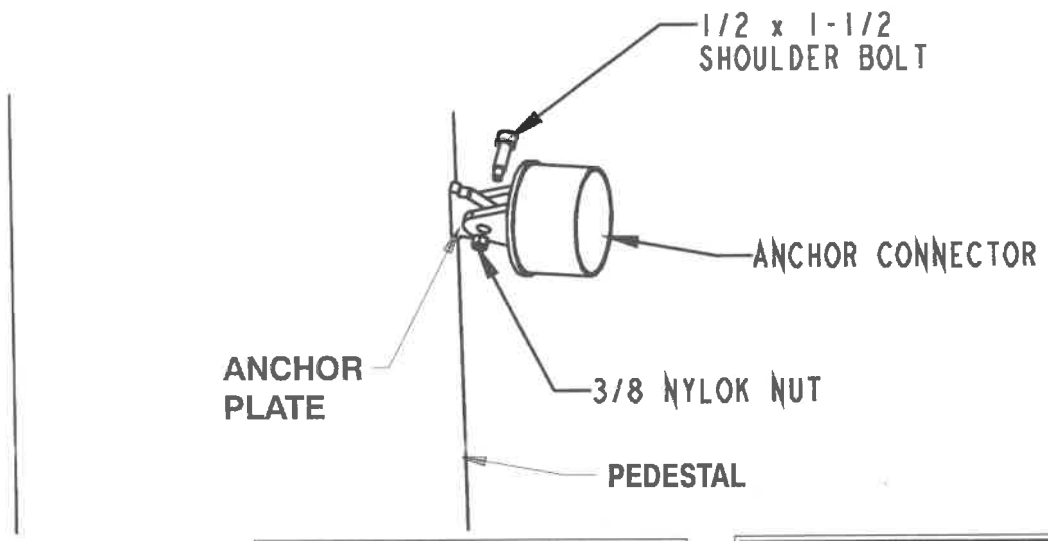

Proceed to 4 Sided Deck Assembly, 6 Sided Deck Assembly, or 8 Sided Deck Assembly.

4 Sided Deck Assembly

Refer to **GENERAL INSTALLATION OVERVIEW** (page 5) as needed.

STEP 1	Place deck on pedestal and align holes in deck with holes in pedestal top plate. Bolt deck to pedestal using 3/8" x 2" button head bolts, a thick washer on both sides, and Nylock nut. Face bolt head downward, toward footing.

Proceed to Post to Deck Assembly

6 Sided Deck Assembly

Refer to GENERAL INSTALLATION OVERVIEW (page 5) as needed.

STEP 1	Place a deck half on pedestal. Loosely bolt deck to pedestal using 3/8" x 2" button head bolts, a thick washer on both sides, and Nylock nut. Face bolt head downward, toward footing.

STEP 2	Support deck and pedestal from tipping by using two (2) support stands along outside edge of deck.

STEP 3	Repeat **STEP 1** above with remaining half of deck. Use a third support stand on second deck half to stabilize.

STEP 4	Align deck halves so that top surface and outside edge are even. Bolt deck halves together using 3/8" x 2-1/4" button head bolts, thick washers on each side, and Nylock nuts.

STEP 5	Tighten deck-to-pedestal bolts.

STEP 6	Remove support stands.

Proceed to Post to Deck Assembly

8 Sided Deck Assembly

Refer to GENERAL INSTALLATION OVERVIEW (page 5) as needed.

STEP 1	Place square, center deck section on pedestal and align holes in deck with holes in pedestal top plate. Bolt using 3/8" x 2" button head bolt with thick washers on both sides, and Nylock nut. Face bolt head downward, toward footing.

STEP 2	With two or more people, lift and position one outer deck section to center deck section. Hold deck sections in position while another person slides support stand under outer edge of outer deck section to help stabilize. Loosely bolt center section and outer section together using 3/8" x 2-1/4" button head bolts, thick washers on both sides, and Nylock nut.

STEP 3	Support deck and pedestal from tipping by maintaining support stand along outside edge of deck assembly.

STEP 4	Using a second deck section on the opposite side to stabilize, repeat **STEP 2** and **STEP 3** above.

STEP 5	Repeat **STEP 2** and **STEP 3** for the two remaining outer deck sections.

STEP 6	Loosely bolt together remaining adjacent deck sections using 3/8" x 2-1/4" button head bolts, thick washers on both sides, and Nylock nut.

<u>Note</u>: At this point, all deck sections should be loosely bolted together. Each outer section should be supported by a support stand.

STEP 7	Tighten bolts in sequence given below. As bolts are tightened, align top surface and outer edges of mating deck sections.

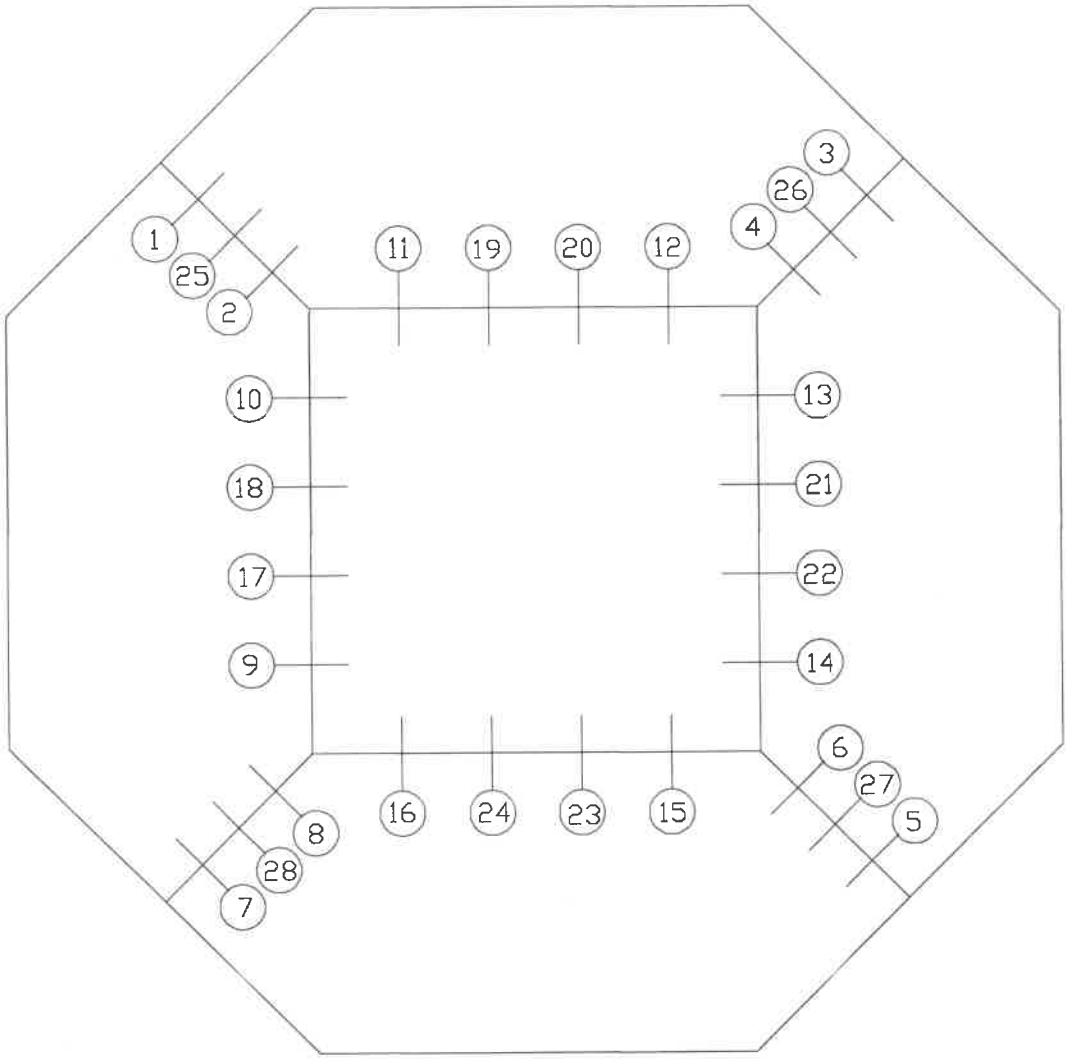

Proceed to **Post to Deck Assembly**

Post to Deck Assembly

STEP 1	Place post cover onto post. ***Important: Post cover MUST be placed onto post before post is positioned around anchor connector and attached.*** With post cover positioned on post, place post around anchor connector inserting sleeve portion of anchor connector into end of post. Repeat step for all remaining posts. ***Do not attach posts to anchor connectors with self drilling screws at this time.***

STEP 2	Loosely bolt post to deck using two 3/8" x 1-1/2" button head bolts and 3/8" thick washers. The post has a flange nut to receive bolt.

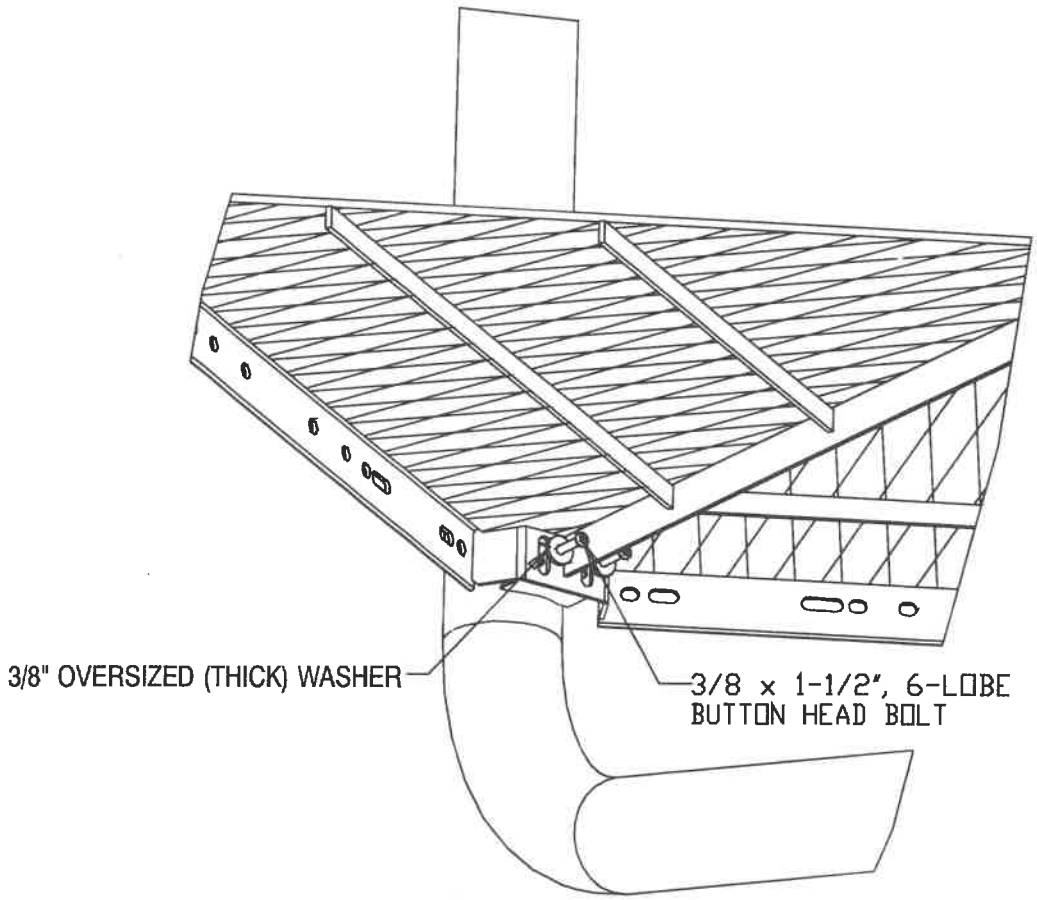

Note: Do not bolt posts to anchors at this point.

STEP 3 for 4 Sided Decks	Plumb posts and tighten 3/8" button head bolts. Attach posts to anchors using 4 (four) 1/4" self-drilling screws. Proceed to **STEP 7**.

STEP 3 for 6 & 8 Sided Decks	Level deck and plumb posts one deck section at a time. Place a level on deck near the post and adjust deck section until level. Place support stand under deck section near post to hold position. Repeat leveling procedure for each remaining post on that section (3 posts per section for 6 sided deck; 2 posts per section for 8 sided deck). With deck section level, plumb each post and tighten 3/8" x 1-1/2" button head bolts.

STEP 4	Attach posts to anchor using 4 (four) 1/4" self-drilling screws.

STEP 5	Remove support stands.

STEP 6	Repeat **STEP 3, 4, & 5** for each remaining deck section.

STEP 7	Recheck levels and adjust as needed.

STEP 8	Slide post covers firmly against pedestal and attach to post using 2 (two) 1/4" x 1-1/4" self-drilling screws.

STEP 9	Orient and align deck as specified in layout. Connect deck-to-deck components, if any, to establish deck spacing.

STEP 10	Using the holes in the pedestal base as a guide, drill 1/2" diameter holes 6" deep using a 1/2" masonary drill bit. Do not allow the bit to wobble or wander. Blow the holes completely clean and free of dust. With nut and washer in place, drive 1/2" x 6" concrete expansion bolt into each hole. Tighten nuts fully.

FINAL STEP

Make sure all fasteners are tight.

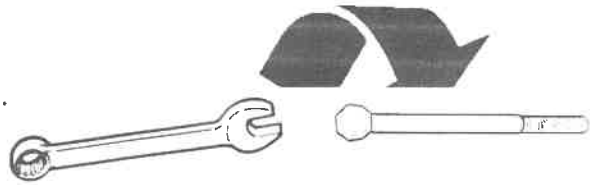

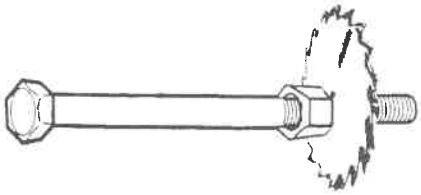

Trim all bolts. No more than two threads may protrude after trimming by installer.

Install 12" of cushioning material in and around the area required for the unit.

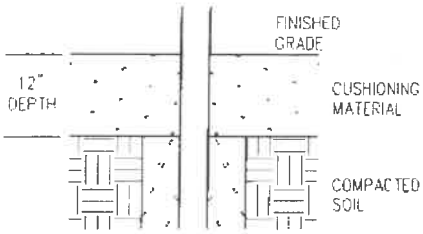

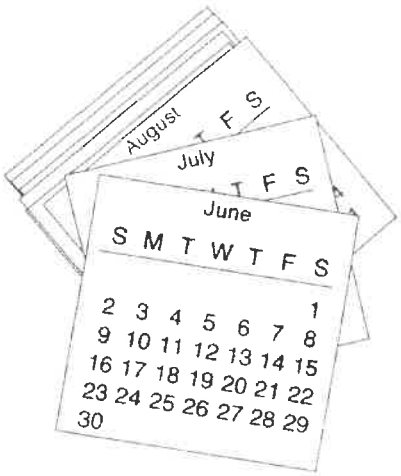

Establish a regular maintenance schedule, checking for loose or missing bolts, worn parts, etc.

INSTALLATION INSTRUCTIONS

Decks without roof

MIRACLE
RECREATION EQUIPMENT COMPANY

Model 714-501 & 714-501F*: (3) Opening Tri-Deck
Model 714-502 & 714-502F*: (4) Opening Square Deck
Model 714-503 & 714-503F*: 1/2 Hex Deck (full)
Model 714-504 & 714-504F*: 1/2 Hex Deck (open)
Model 714-505: Parallelogram Deck (full)
Model 714-506: Parallelogram Deck (1/2 open)

* indicates (CSA/NFS)

Model 714-507: Parallelogram Deck (open)
Model 714-508: Rectangle Deck (full)
Model 714-509: Rectangle Deck (1/2 open)
Model 714-510: Rectangle Deck (open)
Model 714-583: Arch for 3' Deck
Model 714-585: Arch for 5' Deck
Model 714-586: Arch for 6' Deck

March 4, 1998 Rev. L

KIDS' CHOICE

714-501
714-501F

714-502
714-502F

714-583 (shown)
714-585
714-586

714-503
714-503F

714-504
714-504F

714-505

714-506

714-507

714-508

714-509

714-510

714-542
714-543
714-544

714-551
714-552
714-553
714-554
714-556

714-572
714-573
714-574

714-583
714-585
714-586

TOP VIEW

FOOTING LAYOUT

TRIANGLE

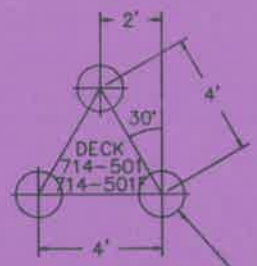

18" DIA X 36" DEEP FOOTING (4) REQ'D

18" DIA X 36" DEEP FOOTING (3) REQ'D

SQUARE

HALF HEX (FULL)

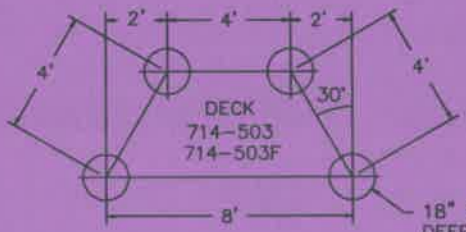

18" DIA X 36" DEEP FOOTING (4) REQ'D

HALF HEX (OPEN)

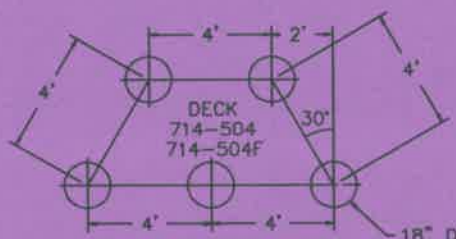

18" DIA X 36" DEEP FOOTING (5) REQ'D

PARALLEL (FULL)

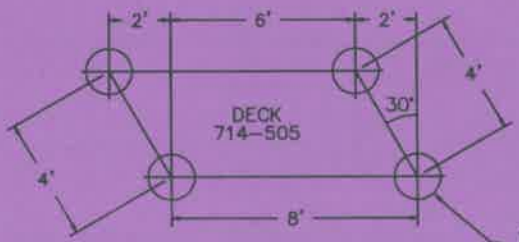

18" DIA X 36" DEEP FOOTING (4) REQ'D

TOP VIEW

FOOTING LAYOUT

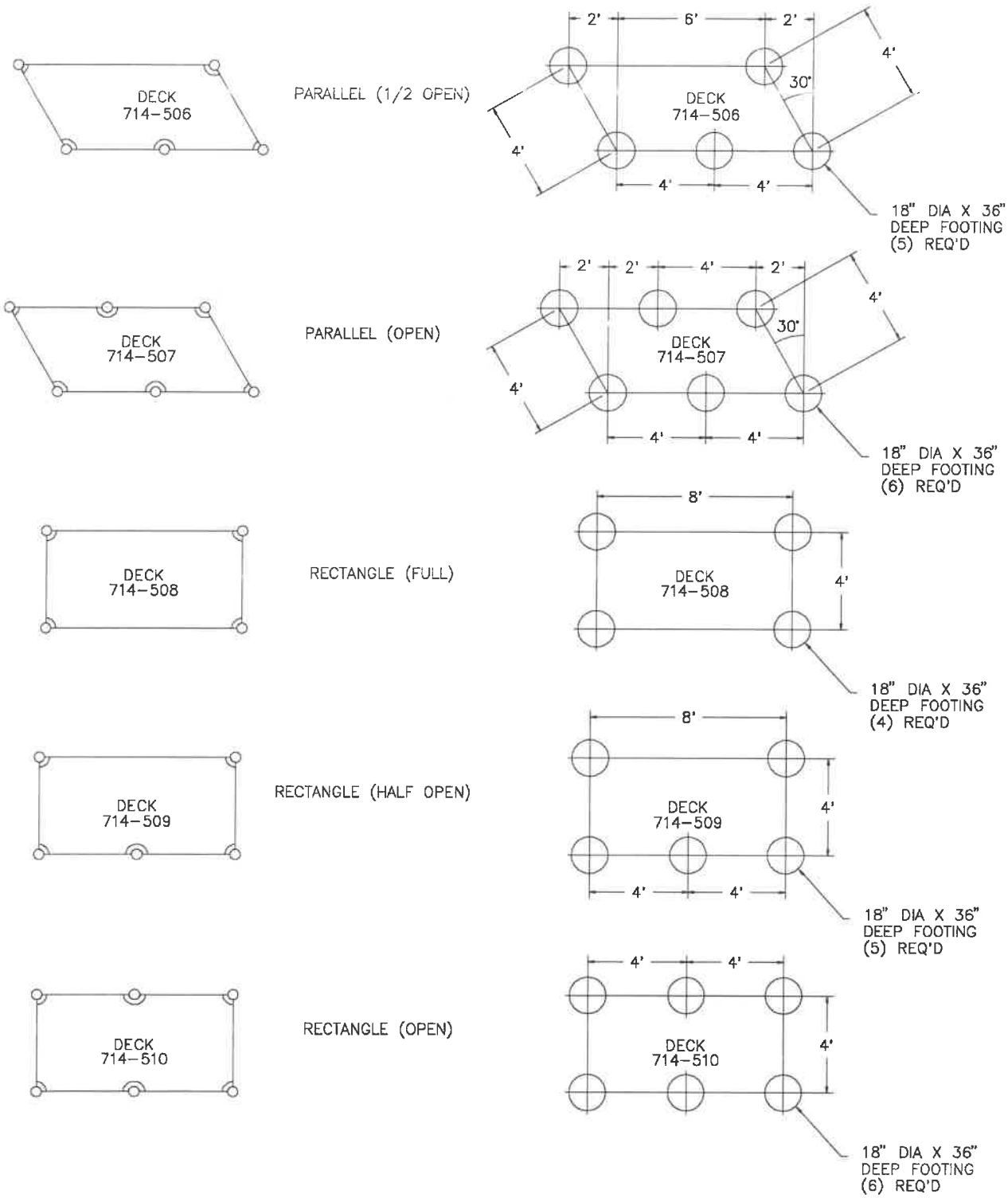

PART I - GENERAL

A. Ground Space Required:

(3) sided deck	Models 714-501 & 714-501F	6.9 sq. ft.
(4) sided deck	Model 714-502 & 714-502F	16 sq. ft.
1/2 hex deck	Models 714-503, 714-503F, 714-504, & 714-504F	20.8 sq. ft
Parallelogram deck	Models 714-505, 714-506, 714-507	27.7 sq. ft.
Rectangular deck	Models 714-508, 714-509, 714-510	32 sq. ft.

B. Concrete required:

Each deck post (or archway leg) requires .125 cubic yard

PART II - FOOTING AND ASSEMBLY INSTRUCTIONS

PLACEMENT OF I.D. AND WARNING LABELS

Both an I.D. label and a Warning label are provided for each deck. Place I.D. and Warning Labels on a post (or arch leg) at or near deck access point (stairs, ramp, etc.) at a distance between 3' and 5' from the top of the protective surfacing. If deck contains more than one access point, place labels on the access point which will be most frequently used, or on access point which most directly faces the approach from the playground entrance. Each label should be placed on post surface so that it faces the user as he enters the deck.

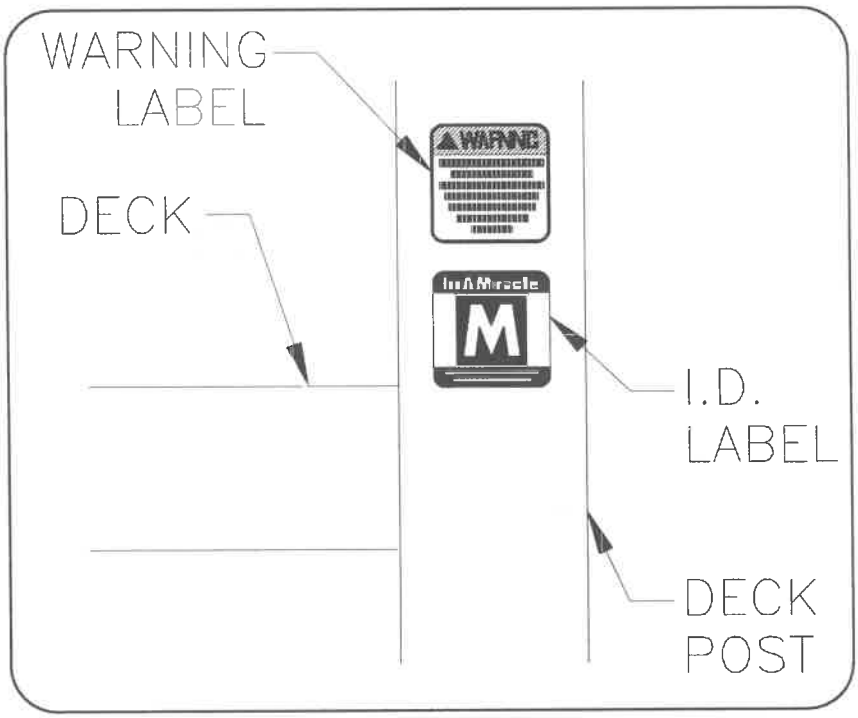

Application of I.D. and Warning Labels

Prepare surface. Remove any dust, oil, or other alien substance from the label location area on post. Ensure that area is dry. When area is both clean and dry, carefully peel off label from paper backing and place on post (or arch leg) so that label is flush and flat to the plane of the post with no wrinkles or tears, with graphic as indicated in *Label Detail.*

Maintenance and Replacement of I.D. and Warning Labels

Inspect label regularly. If label should become torn, removed, opaqued or otherwise disfigured, replace label. Replacement labels may be obtained by contacting your local Miracle sales representative.

Important Notes:

1. Before installing or erecting this equipment, please read and comply with all applicable recommendations in Safety Brochure 100 enclosed. If for some reason this brochure is missing, contact your local Miracle sales representative for a copy.

2. Before any construction is begun, check with all utility companies for exact location of underground utilities.

3. When designing areas for footings and the area under and adjacent to all equipment, consideration should be given to soil types and subgrade characteristics. The purchaser and/or installing contractor is responsible for proper installation and insuring that abnormal and unsafe compaction does not occur in these areas, which are generally recommended to be under and a minimum of 6'-0" out from the edges of all play structures.

4. It is the purchaser's responsibility to maintain these areas properly after installation. It is recommended that compaction tests be made several times per year. When compaction occurs, it is recommended that the area affected be scarified or additional pea gravel, sand, redwood bark or coarse wood shavings be added until the area is soft and resilient.

A. Footing Instructions:

1. The deck footings are 18" in diameter by 36" deep from top of finished surfacing and 4'-0" apart center to center. (See footing detail.)

Refer to *Footing Details* Installation.

Note: Miracle suggests before pouring concrete, to have the unit entirely assembled, leveled, plumbed and blocked, if necessary, so only one pouring is required.

B. Assembly Instructions:

Note: Deck posts (and arches) must be ordered separately from the decks. One arch functions as two deck posts.

1. Refer to footing layout and set a deck post into each one of the deck footings. Slide a deck support for each deck corner supported by a common clamp onto a clamp assembly half. Position first clamp half with a second clamp half around each one of the deck posts. Fasten clamp halves together and to posts using 1/4" x 1-1/4" self drilling screws. The clamps should be installed so that the top of the clamp is approximately 3/4" below the intended deck height. (Note the label at 36" from the bottom of the post which indicates the top of the finished surface.) Orient the deck support toward the deck center.

Refer to *Versa-Lok® Clamp Assembly* Installation.

Important Note: The legs of the arch posts may vary slightly in length. When setting arches in footings, always measure 36" from the end of the shortest leg to determine the exact depth of both footings and the protective surface level of both legs. Use this determination as a reference for deck and protective surfacing heights rather than the labels.

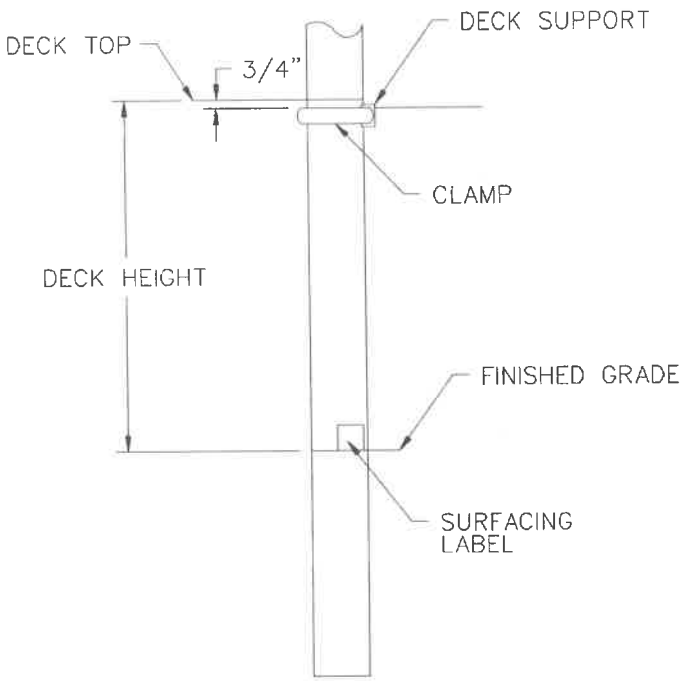

2. Drill 1/2" diameter holes through the PVC coating at the deck corner mounting hole.

3. Rest the deck on the clamps. Plumb and block up your posts and make sure your deck height is correct and that it is level. Align the deck support mounting hole with the deck corner mounting hole and attach with a 1/2" x 1-1/4" button head bolt and flat washer.

4. Square, plumb, and level the deck assembly.

   a. When installing deck sections which share a long side (at the same height) without a middle post, drill PVC from the corresponding holes in the long side edge angle and fasten with 4 (four) 1/2" x 2-1/4" 6-lobe button head bolts, flat washers, lock washer and nylock nut. Trim and smooth any bolt threads that project more than (2) threads past nut.

   b. Deck section which share a 4'-0" side at the same or varying heights attach to common posts per instructions 1, 2, and 3 above. Deck to deck fastening on a common 4'-0" side is not necessary.

FINAL STEP	**Refer to *Final Assembly* Installation.**

PARTS LIST

YOU WILL RECEIVE A COMBINATION OF THE FOLLOWING DECK POSTS/ARCHES OPTIONS. PLEASE CONSULT YOUR INDIVIDUAL TOP VIEW AND FOOTING LAYOUT DRAWINGS TO DETERMINE THE TYPE AND LOCATION OF EACH DECK POST OR ARCH.

STEEL COMPONENTS

MODEL	PART NO.	DESCRIPTON
714-551	713551P	106" DECK POST
714-552	713552P	136" DECK POST
714-553	713553P	160" DECK POST
714-554	713554P	178" DECK POST
714-556	985244P	196" DECK POST
714-542	713542P	136" DECK POST (HEX ROOF)
714-543	713543P	160" DECK POST (HEX ROOF)
714-544	713544P	178" DECK POST (HEX ROOF)
714-572	713572P	144" DECK POST (SQUARE ROOF)
714-573	713573P	168" DECK POST (SQUARE ROOF)
714-574	713574P	186" DECK POST (SQUARE ROOF)
714-583	713828P	ARCH FOR 3' DECK
714-585	713827P	ARCH FOR 5' DECK
714-586	713808P	ARCH FOR 6'-6" DECK

ALUMINUM COMPONENTS

MODEL	PART NO.	DESCRIPTON
714-551-2	713593P	106" DECK POST
714-552-2	713594P	136" DECK POST
714-553-2	713595P	160" DECK POST
714-554-2	713599P	178" DECK POST
714-542-2	713585P	136" DECK POST (HEX ROOF)
714-543-2	713586P	160" DECK POST (HEX ROOF)
714-544-2	713587P	178" DECK POST (HEX ROOF)
714-572-2	713589P	144" DECK POST (SQUARE ROOF)
714-573-2	713590P	168" DECK POST (SQUARE ROOF)
714-574-2	713591P	186" DECK POST (SQUARE ROOF)

INSTALLATION INSTRUCTIONS

MIRACLE
RECREATION EQUIPMENT COMPANY

Overhead Climber Components

Model 714-552: Steel Post
Model 714-552-2: Aluminum Post
Model 714-709-5: Horizontal Try-Rings
Model 714-709-105: 10' Horizontal Try-Rings
Model 714-711-5: "L" Try-Rings
Model 714-722-5: 8' Serpent Climber
Model 714-722-125: 12' Serpent Climber
Model 714-813-5: Deck Enclosure
Model 714-815-5: Vertical Ladder
Model 714-863-5: Horizontal Ladder
Model 714-863-45: Horizontal Ladder
Model 714-864-5: Handring Bridge
Model 714-864-105: 10' Handring Bridge
Model 714-914-5: "L" Ladder
Model 714-915-5: "S" Ladder
Model 714-915-25: "U" Ladder
Model 714-944-5: Orbit Overhead Climber
Model 714-945-5: Single Rail
Model 714-947-5: Double Rail
Model 714-949-5: "L" Rail (Single)
Model 714-950-5: "L" Rail (Double)
Model 714-951-5: "S" Rail (Single-Left)
Model 714-951-15: "S" Rail (Single-Rightt)
Model 714-951-25: "U" Rail (Single)
Model 714-952-5: "S" Rail (Double-Left)
Model 714-952-15: "S" Rail (Double-Rightt)
Model 714-952-25: "U" Rail (Double)
Model 714-964-5: Spider Ladder
Model 714-971-5: 90 Degree Swing Ring Bridge
Model 714-973-5: Swing Ring Bridge

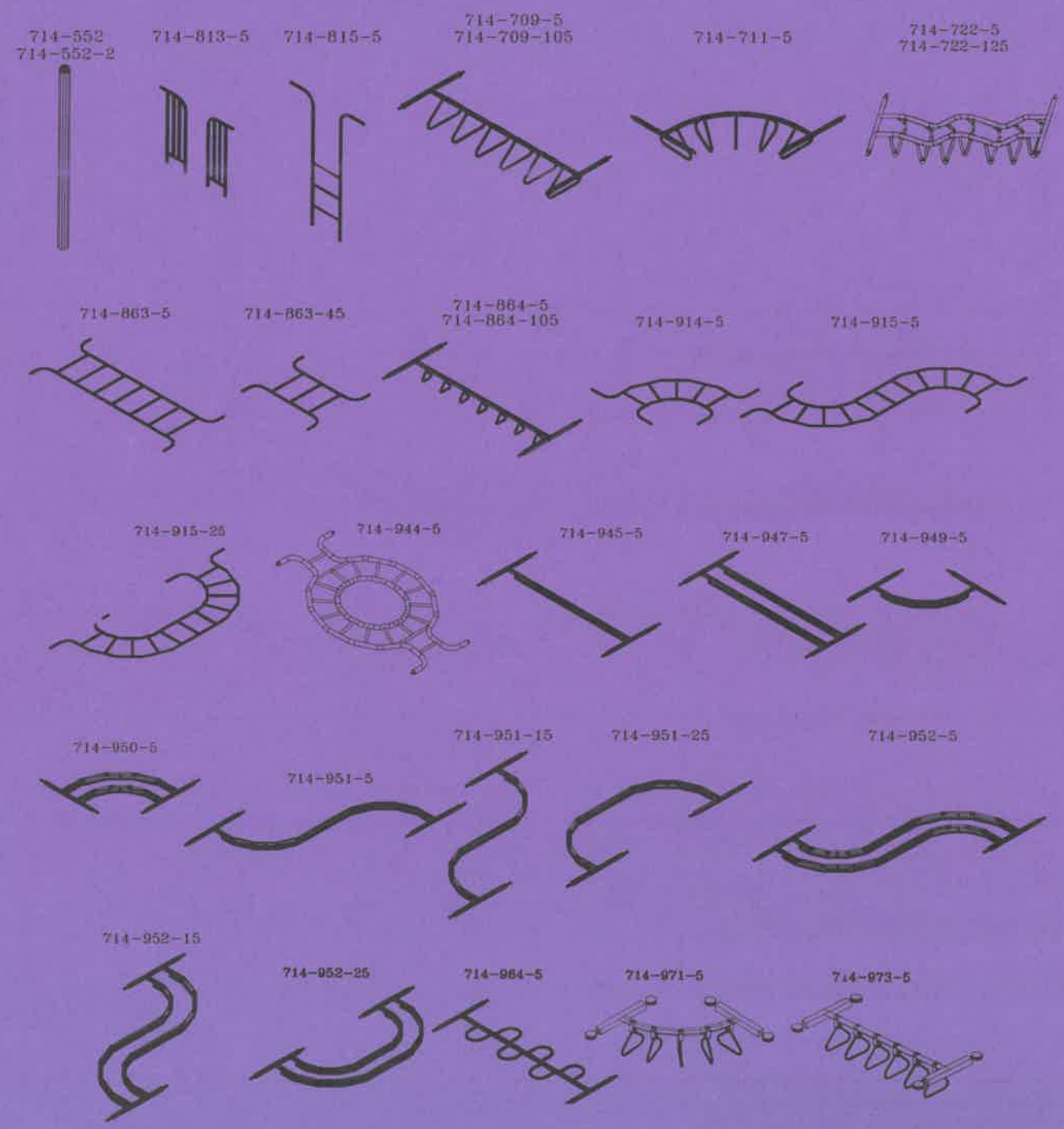

Note: The following overhead climber models may not be used in series: 714-709-5, 714-711-5, 714-864-5, 714-971-5, and 714-973-5. All others may be used in series and must have rung model 714-814-5 for transition between components.

SAMPLE OVERHEAD CLIMBER INSTALLATION

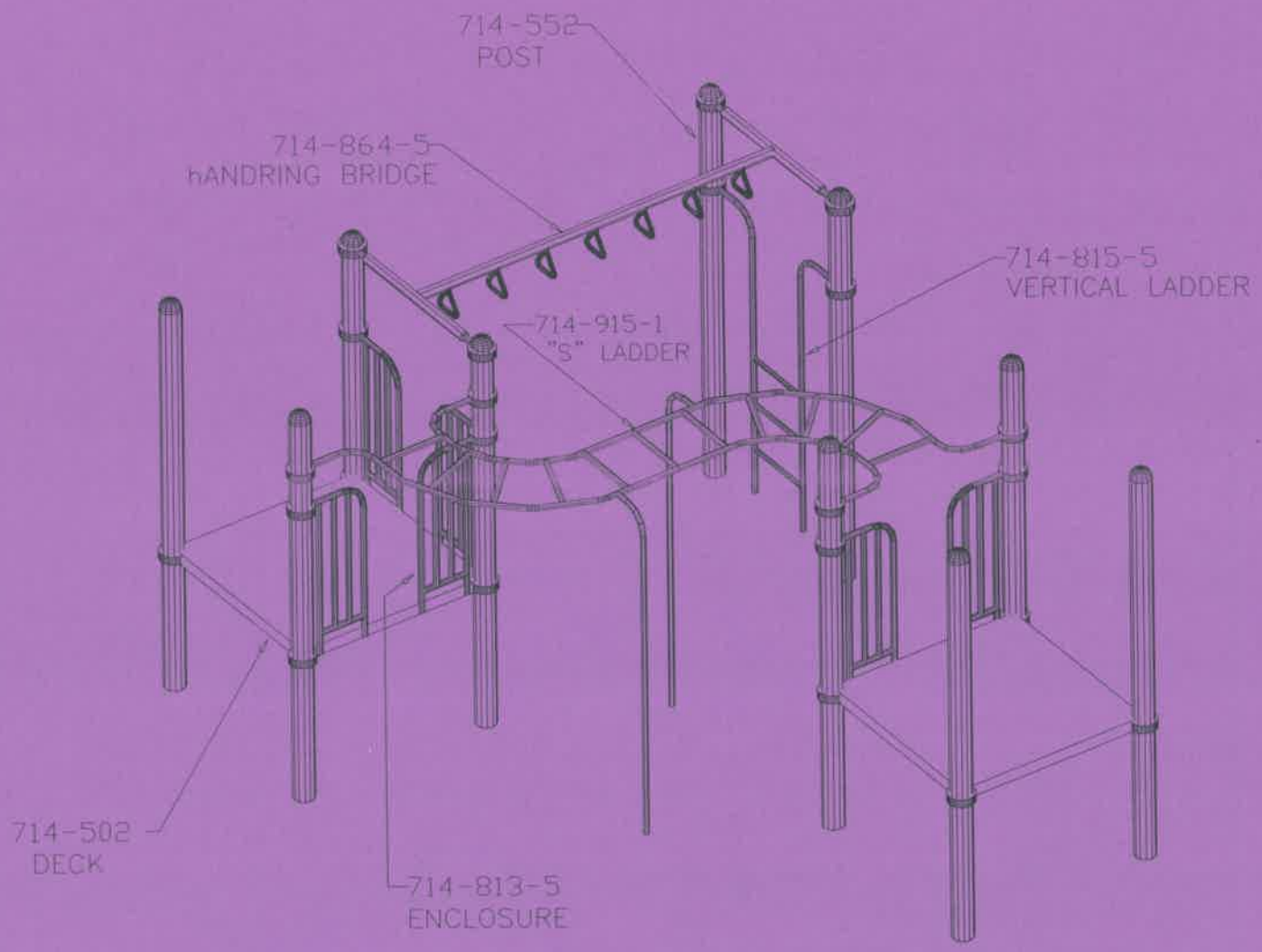

Important Note: Components MUST be ordered separately as shown.

TOP VIEW
MODELS SHOWN
714-552, 714-813-5
714-815-5, 714-863-5

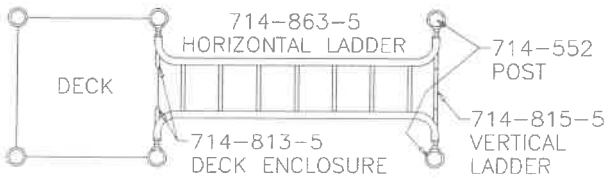

FOOTING LAYOUT

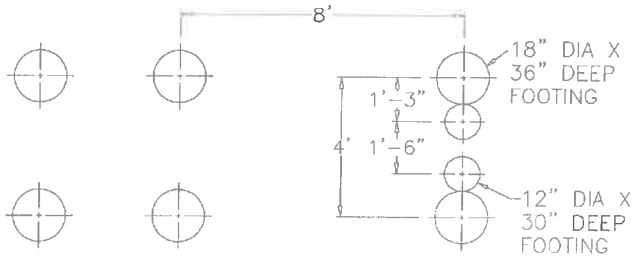

FOOTING LAYOUT
MODELS WITH SAME FOOTING DIMENSIONS
714-709-5, 714-722-5, 714-864-5, 714-945-5
714-944-5, 714-947-5, 714-964-5, 714-973-5

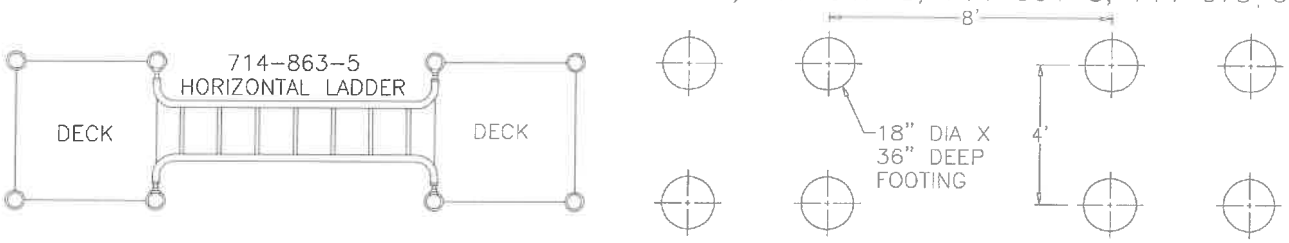

TOP VIEW

FOOTING LAYOUT

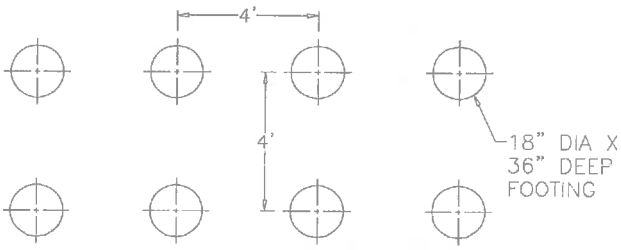

TOP VIEW

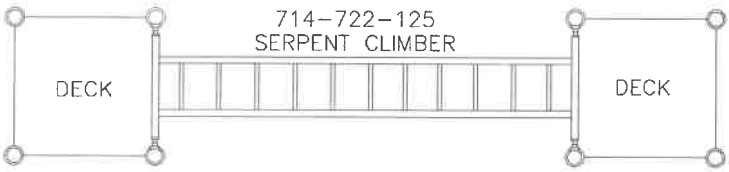

FOOTING LAYOUT
714-722-125

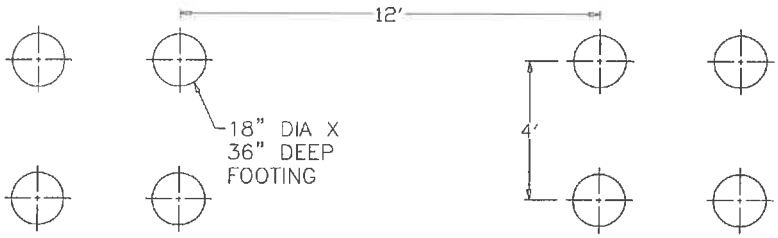

TOP VIEW

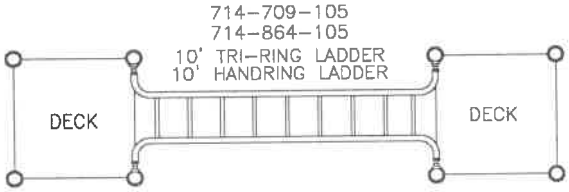

FOOTING LAYOUT

714-709-105 & 714-864-105

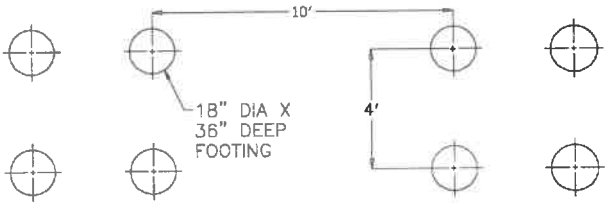

TOP VIEW

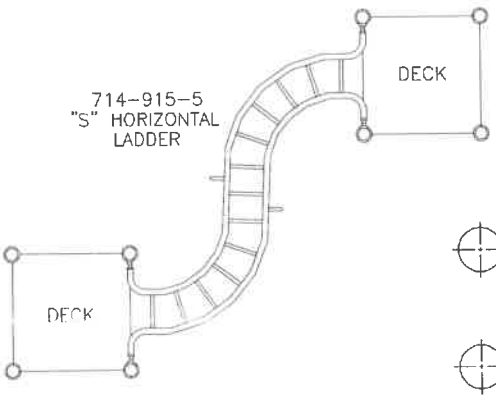

FOOTING LAYOUT
MODELS WITH SAME FOOTING DIMENSIONS
714-951-5, 714-951-15, 714-952-5, 714-952-15

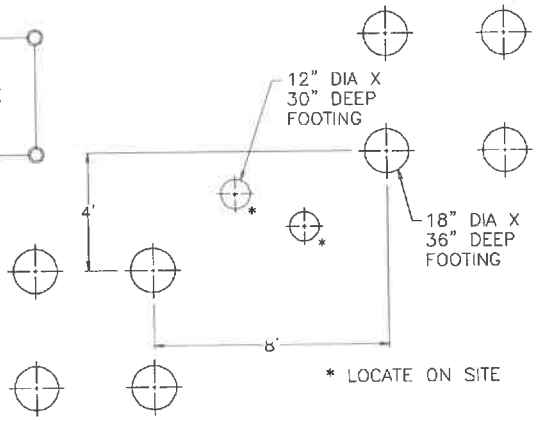

TOP VIEW

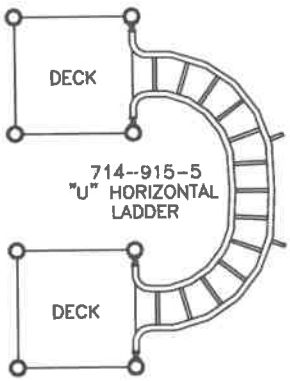

FOOTING LAYOUT
MODELS WITH SAME FOOTING DIMENSIONS
714-951-25, 714-952-25

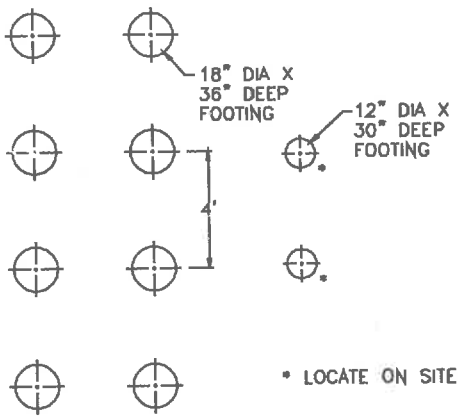

IMPORTANT NOTES

1. Before installing or erecting this equipment, please read and comply with all applicable recommendations in Safety Brochure 100 enclosed. If for some reason this brochure is missing, contact your local Miracle sales representative for a copy.

2. Before starting construction, check with all utility companies for exact locations of underground utilities.

3. When designing areas for footings and the area under and adjacent to all equipment, consideration should be given to soil types and subgrade characteristics. The purchaser and/or installing contractor will be responsible for proper installation and insuring that abnormal and unsafe compaction does not occur in these areas, which are generally recommended to be under and a minimum of 6' out from the edges of all play structures.

4. It is the purchaser's responsibility to maintain these areas properly after installation. It is recommended that compaction tests be made several times per year. When compaction occurs, it is recommended that the area affected be scarified or additional pea gravel, sand, redwood bark or coarse wood chips be added until the area is soft and resilient.

FOOTINGS

1. ***Do not pour concrete for component activity footings until all components in your playsystem have been installed per installation instructions, leveled, plumbed and braced in position.***

2. Locate and dig footings. Place all posts in footings.

Refer to *Footing Details* Installation.

LEG PRE-ASSEMBLY

PRE-ASSEMBLY STEP	***(Perform this step before proceeding further.)*** Attach support legs to main assembly.

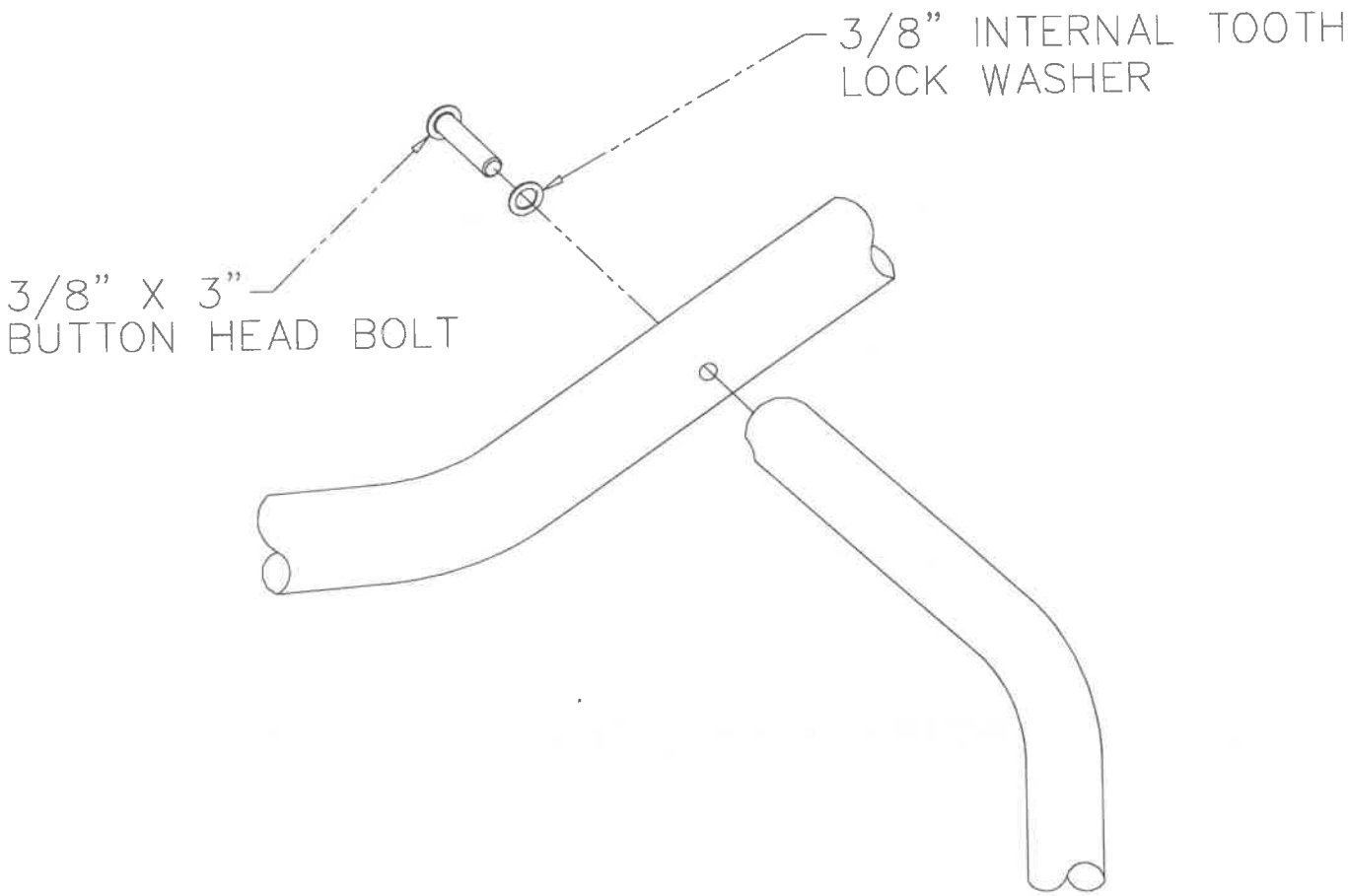

For general instructions for Horizontal and Inclined Climbers, refer to steps 1 through 4 following:

STEP 1.	Insert ends of crossbars into bar sockets.

STEP 2.	Position clamp assemblies to posts at required distances and attach header to posts (placing any support legs in footings).

Refer to *Versa-Lok® Clamp Assembly* Installation.

STEP 3.	Level the climber assembly. Straight 8' end climbers may be inclined (not to exceed 12", end to end).

STEP 4.	Tighten all fasteners.

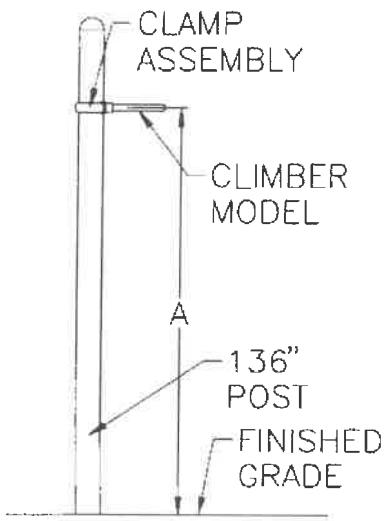

MOUNTING HEIGHT INFORMATION	
CLIMBER MODEL	**MAXIMUM HEIGHT DIMENSION A**
714-863-5, 714-863-45, 714-914-5, 714-964-5, 714-915-5, 714-915-25 714-944-5	84"
714-951-5, 714-951-15, 714-951-25, 714-952-5, 714-952-15, 714-952-25, 714-945-5, 714-947-5, 714-949-5, 714-950-5	87"
714-864 & 714-864-105	96"
714-709-5, 714-709-105, 714-711-5, 714-971-5, 714-973-5, 714-922-5 714-922-125	98"

For Swing ring models only, refer to steps 5a and 5b following:

STEP 5.a.	Align holes in swing ring header hangers with bushings in swing ring handhold assembly and insert bolt through hole and bushings.
STEP 5.b.	Thread nut and tighten to snug; so that swing ring pivots freely. Repeat for all swing ring handholds.

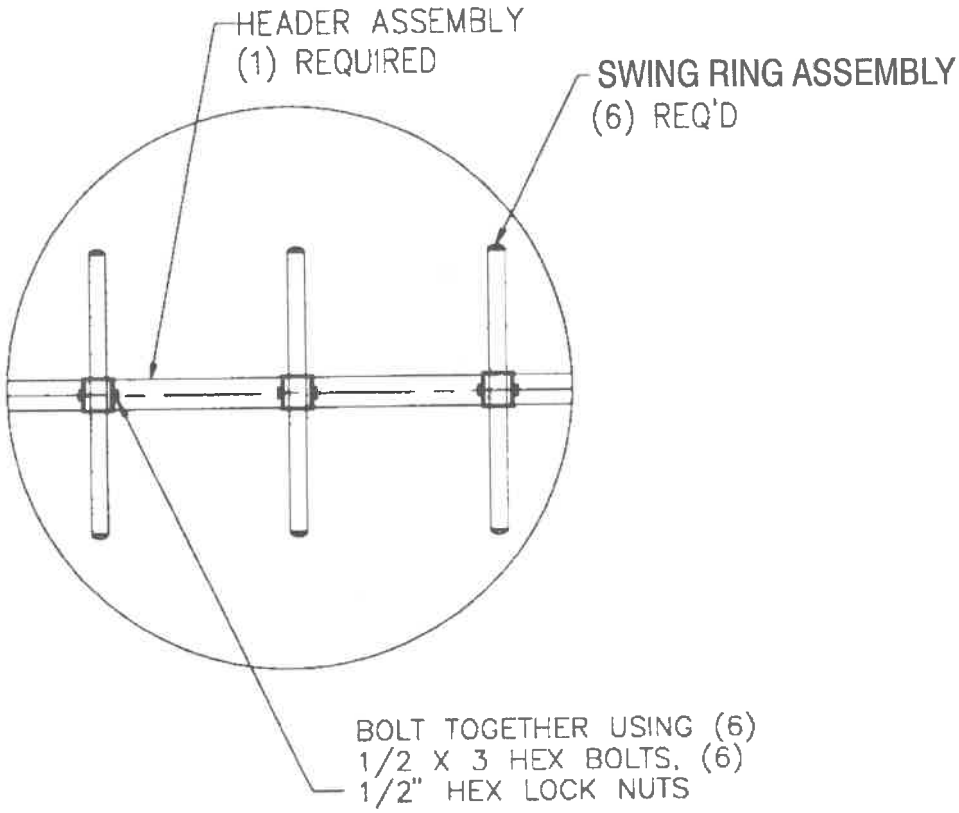

For handring models only, refer to step 5 following:

STEP 5.	Attach a large "S" hook to each of the handrings. Attach the handrings to each one of the wire "U" forms on the beam assembly. Be sure to close the "S" hooks metal to metal.

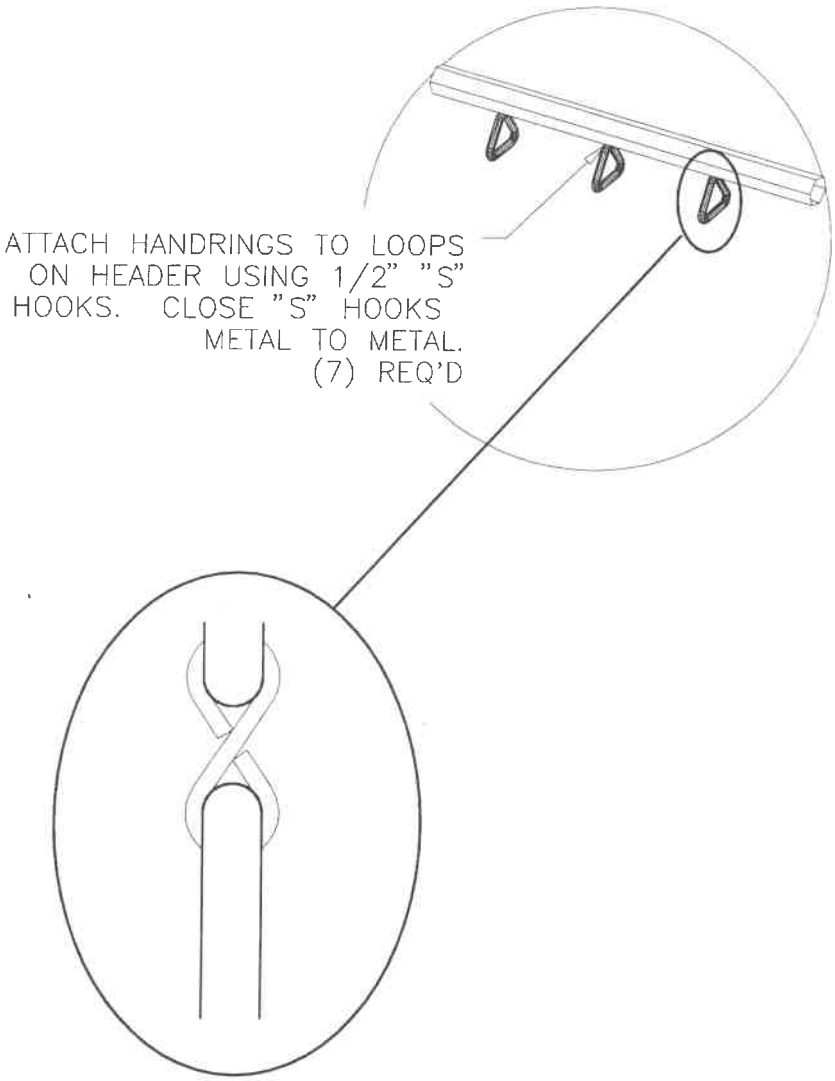

For models with enclosure assembly, refer to steps 6a. through 6c. following:

STEP 6a.	Remove any obstructing PVC from the mating deck holes.

STEP 6b.	Attach enclosure to posts at 38" above deck.

Refer to *Versa-Lok® Clamp Assembly* Installation.

STEP 6c.	Attach enclosure to deck.

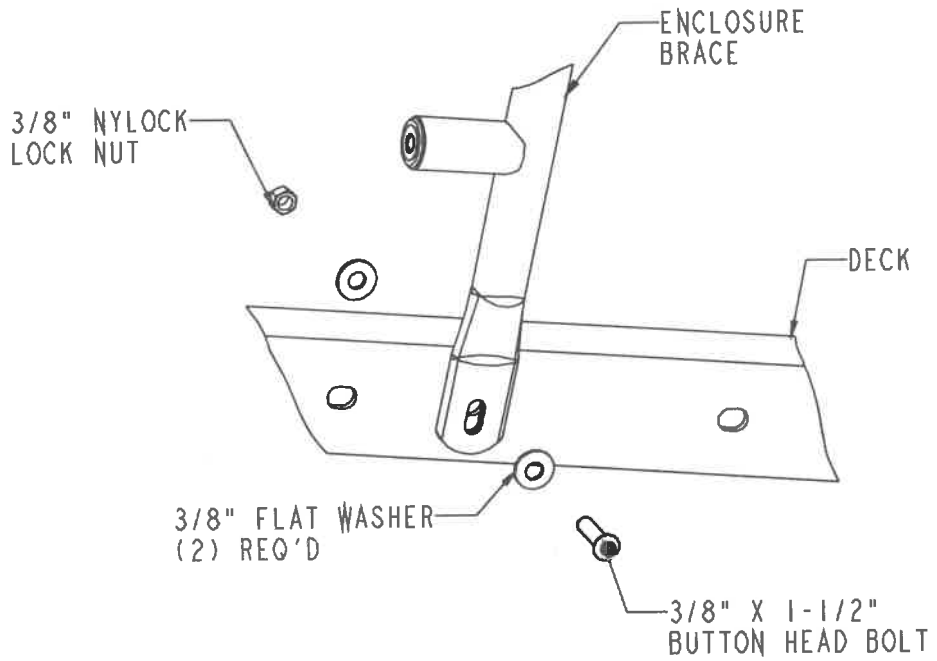

***For models without vertical climbers, proceed to* FINAL STEP.**

For Vertical Climber models assembly, refer to steps 7a. through 7c. following:

STEP 7a.	Place legs in footings.

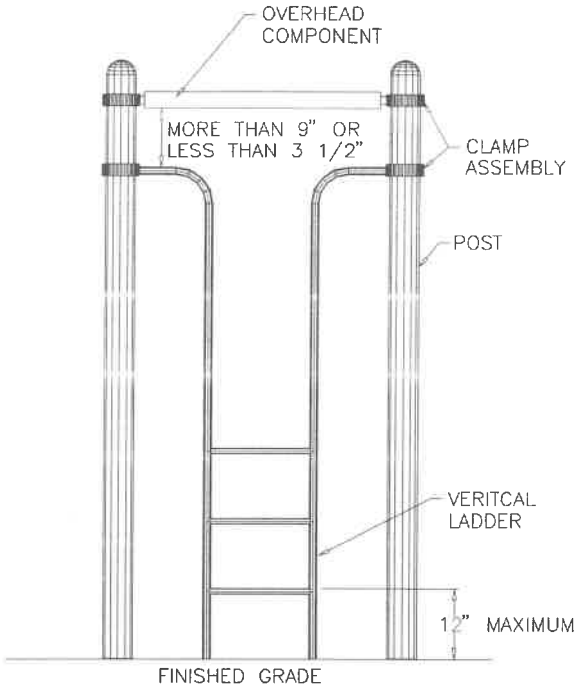

STEP 7b.	Plumb and make vertical.

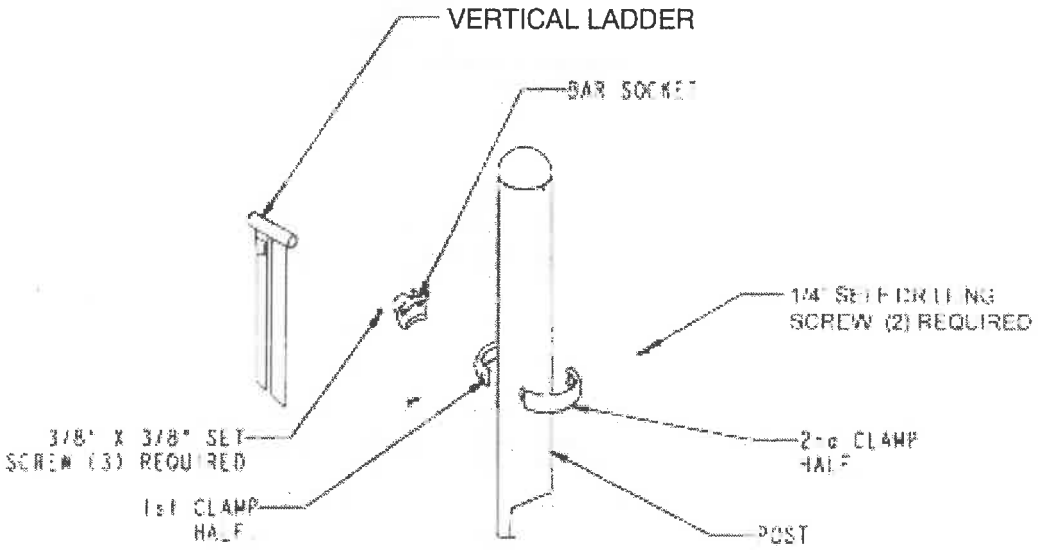

ASSEMBLE POST CLAMPS AND BAR SOCKET TOGETHER AS SHOWN USING THE VERTICAL LADDER TO LOCATE HEIGHT AND ROTATION

STEP 7c.	Attach ladder to posts so that bottom rung is no greater than 12" above above finished surface.

FINAL STEP	**Refer to *Final Assembly* Installation.**

MIRACLE
RECREATION EQUIPMENT COMPANY

INSTALLATION INSTRUCTIONS

Model 714-555: Fence Post
Model 714-555-2: Aluminum Fence Post
Model 714-577-4: 4' Fence section
Model 714-577-8: 8' Fence section
Model 714-578: Archway for Fence

July 22, 1997 Rev. D

714-555

714-577-8

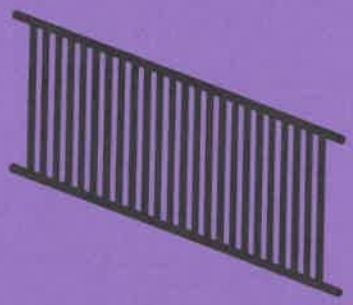

714-578

714-577-4

SAMPLE FENCE SYSTEM

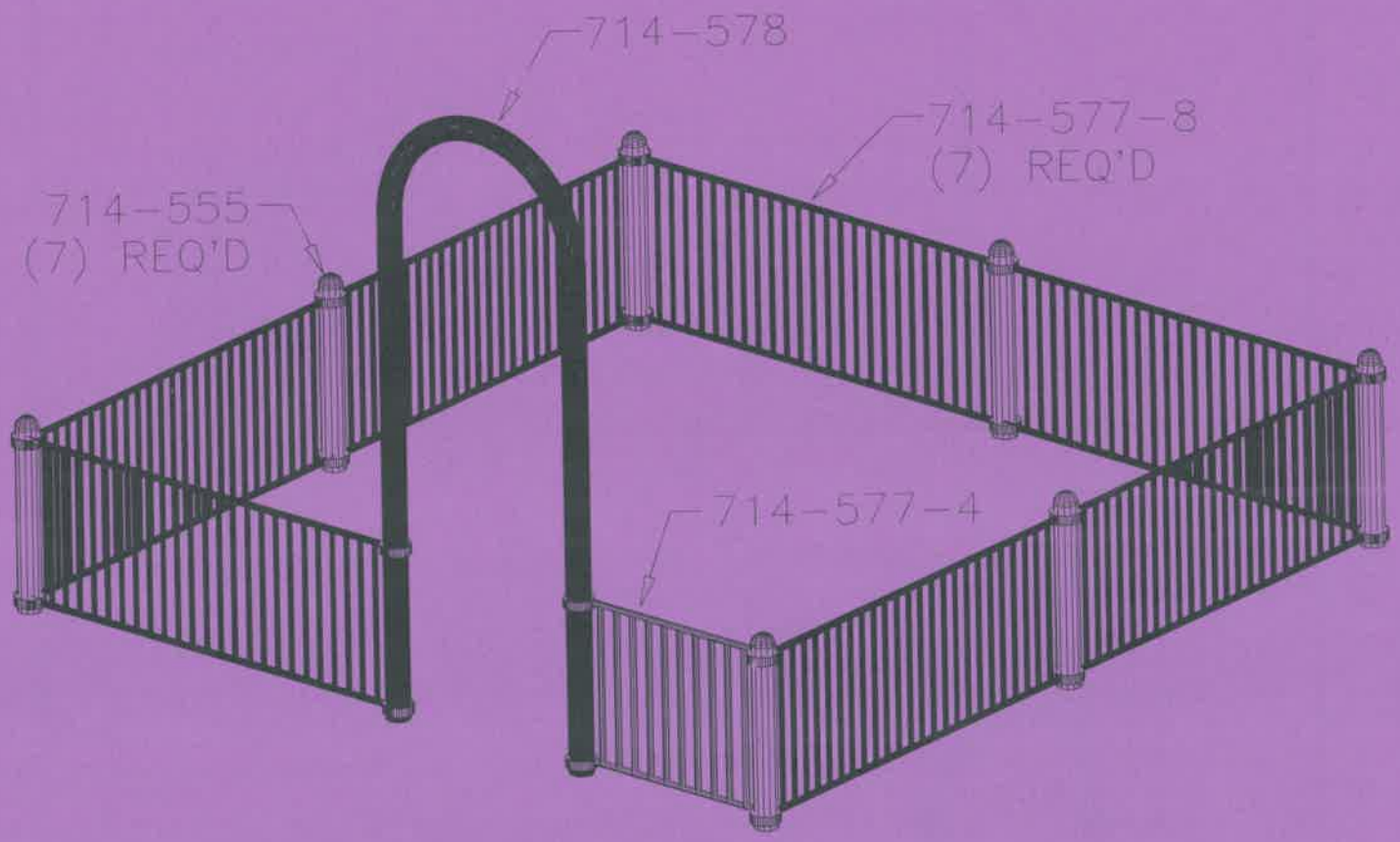

SAMPLE FENCE SYSTEM

TOP VIEW

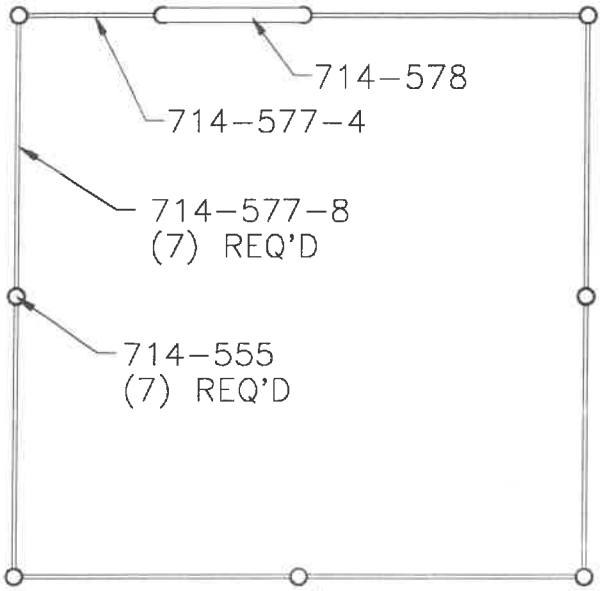

FOOTING LAYOUT

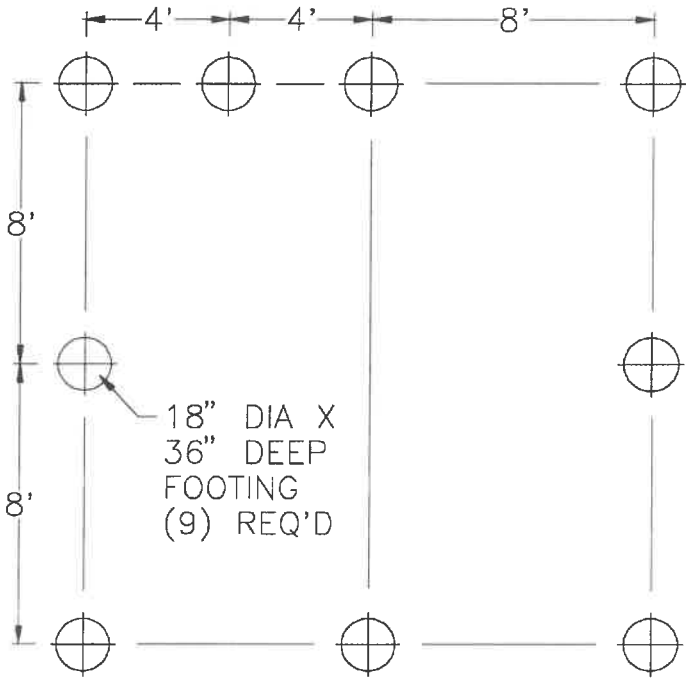

NOTE: SYSTEM SHOWN IS FOR LEVEL GROUND. IF FENCE SYSTEM IS INSTALLED OVER A SLOPED AREA FENCE SECTIONS MAY NEED TO BE OFFSET. AT OFFSET FENCE POSTS, EXTRA CLAMP RINGS WILL BE REQUIRED. MODEL 714-500 (TWO CLAMP RINGS) IS REQUIRED AT EACH OFFSET FENCE POST.

IMPORTANT NOTES

1. Before installing or erecting this equipment, please read and comply with all applicable recommendations in safety brochure 100 enclosed. If for some reason this brochure is missing, contact your local Miracle sales representative for a copy.

2. Before starting construction, check with all utility companies for exact locations of underground utilities.

3. When designing areas for footings and the area under and adjacent to all equipment, consideration must be given to soil types and subgrade characteristics. The purchaser and/or installing contractor will be responsible for proper installation and insuring that abnormal and unsafe compaction does not occur in these areas, which are recommended to be under and a minimum of 6' out from the edges of all play structures. *Note:* The fence (and related components) is not playground equipment and protective surfacing to 6' from the fence is not required. **However, this does not permit the exclusion of protective surfacing which is required for playground equipment whose 6' protective surfacing area may intersect that of the fence.**

4. It is the purchaser's responsibility to maintain these areas properly after installation. It is recommended that compaction tests be made several times per year. When compaction occurs, it is recommended that the area affected be scarified or additional pea gravel, sand, redwood bark or coarse wood chips be added until the area is soft and resilient.

FOOTINGS

1. ***Do not pour concrete for component activity footings until all components in your deck system have been installed per installation instructions, leveled, plumbed and braced in position.***

2. (Refer to *Footing Layout*.) Dig the footings and place posts (and/or archway).

Refer to *Footing Details* Installation.

Important Note: The legs of the arch posts may vary slightly in length. When setting arches in footings, always measure 36" from the end of the shortest leg to determine the exact depth of both footings and the protective surface level of both legs. Use this determination as a reference for component and protective surfacing heights rather than the labels.

(Refer to *Sample Fence System illustration* as needed.)

STEP 1	Slide a bar socket (for each fence section component supported by a common clamp) onto a clamp half. Insert the ends of the top rail of the component into the bar sockets.

Refer to *Versa-Lok®* *Clamp Assembly* Installation.

STEP 2	Repeat step #1a. for the bottom rails of the component. Raise the component into the opening between the posts and position the top of the panel to 38" above the ground. Position each clamp assembly around one of the posts (or archway legs if connecting to the archway) and attach. ***(Important Note: If a post must "share duty" (i.e., support more than one component), all bar sockets and deck supports must be slid onto clamp halves before attaching the clamp assembly around the post.)***

FINAL STEP	**Refer to *Final Assembly* Installation.**

MIRACLE
RECREATION EQUIPMENT COMPANY

INSTALLATION INSTRUCTIONS

Side by Side Slides
with Wide Slide Transition Sit-Down Canopy

Model 714-700: from 3' Deck

Model 714-701: from 5' Deck

April 2, 1998 Rev. 0

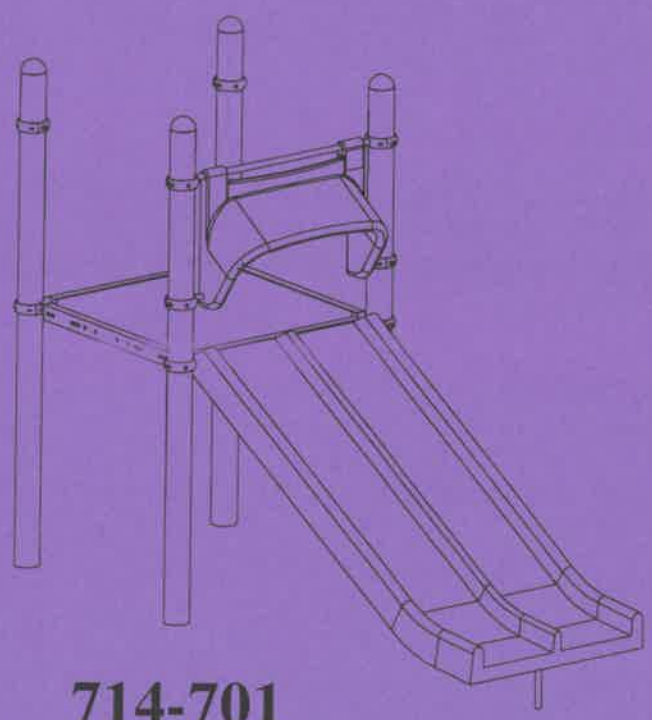

714-701

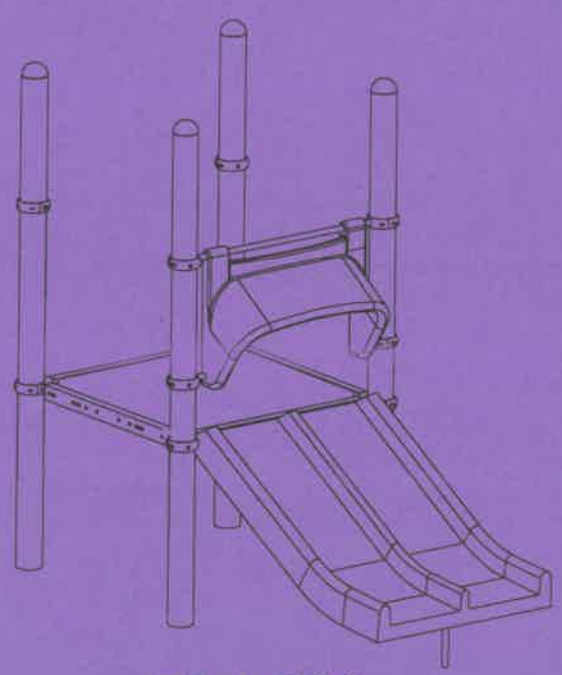

714-700

TOP VIEW

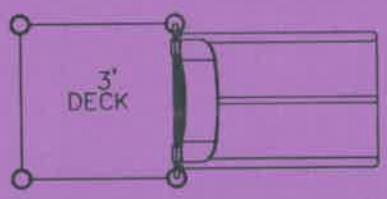

SIDE BY SLDE
SLIDE
714-700

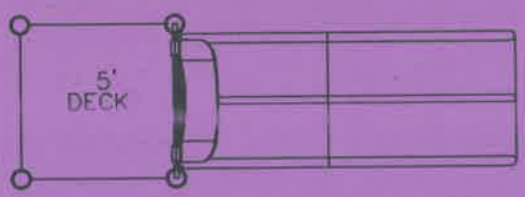

SIDE-BY SIDE
SLIDE
714-701

FOOTING LAYOUT

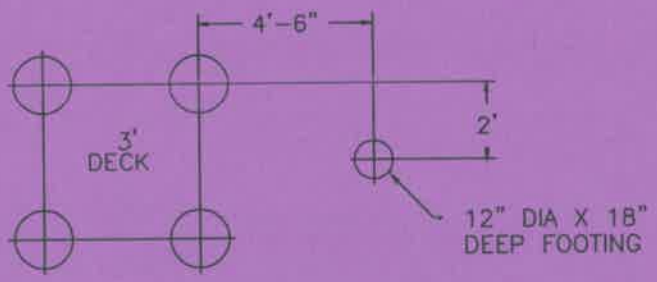

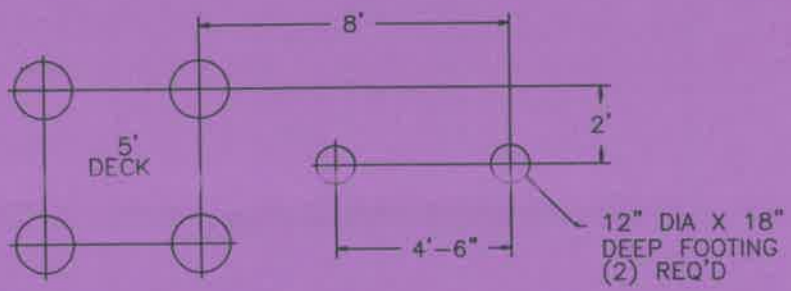

IMPORTANT NOTES

1. Before installing or erecting this equipment, please read and comply with all applicable recommendations in Safety Brochure 100 enclosed. If for some reason this brochure is missing, contact your local Miracle sales representative for a copy.

2. Before starting construction, check with all utility companies for exact locations of underground utilities.

3. When designing areas for footings and the area under and adjacent to all equipment, consideration should be given to soil types and subgrade characteristics. The purchaser and/or installing contractor will be responsible for proper installation and insuring that abnormal and unsafe compaction does not occur in these areas, which are generally recommended to be under and a minimum of 6' out from the edges of all play structures.

4. It is the purchaser's responsibility to maintain these areas properly after installation. It is recommended that compaction tests be made several times per year. When compaction occurs, it is recommended that the area affected be scarified or additional pea gravel, sand, redwood bark or coarse wood chips be added until the area is soft and resilient.

FOOTINGS

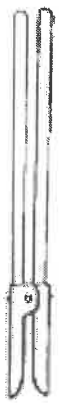

Dig the footings and place posts.

Refer to *Footing Details* Installation.

Note: ***Do not pour concrete for footings until all components in your deck system have been installed per installation instructions, leveled, plumbed and braced in position.***

STEP 1	Fasten the front leg to the slide bottom (and the mid-leg if assembling Model 714-701). Position slide against the deck edge and set leg in footing hole.

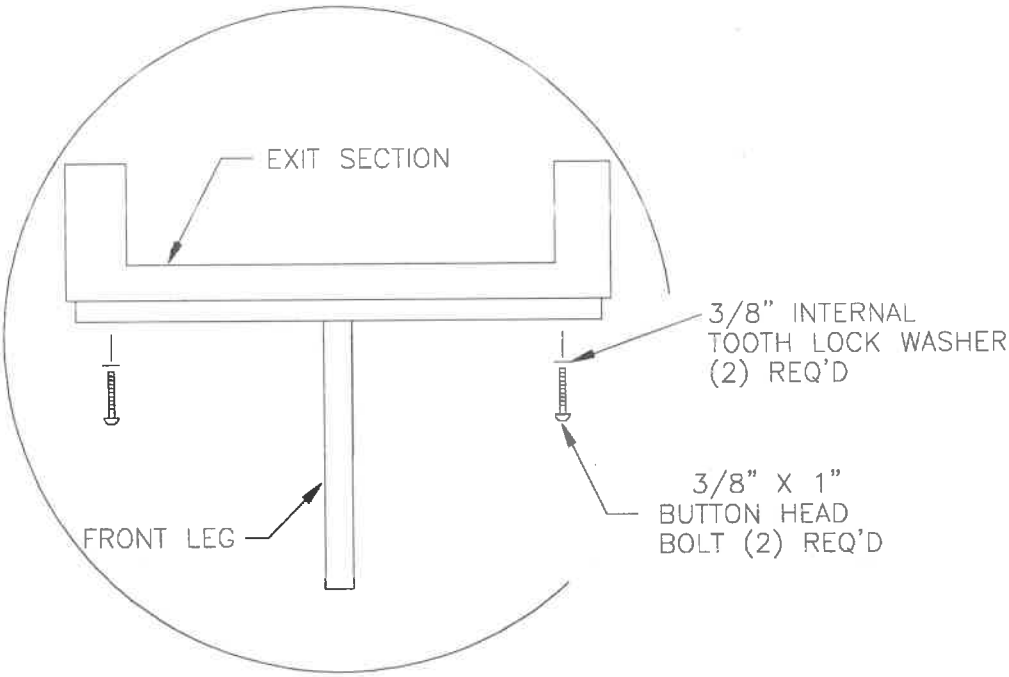

STEP 2	Ensure that the bedway entrance region is flush with the deck and attach.

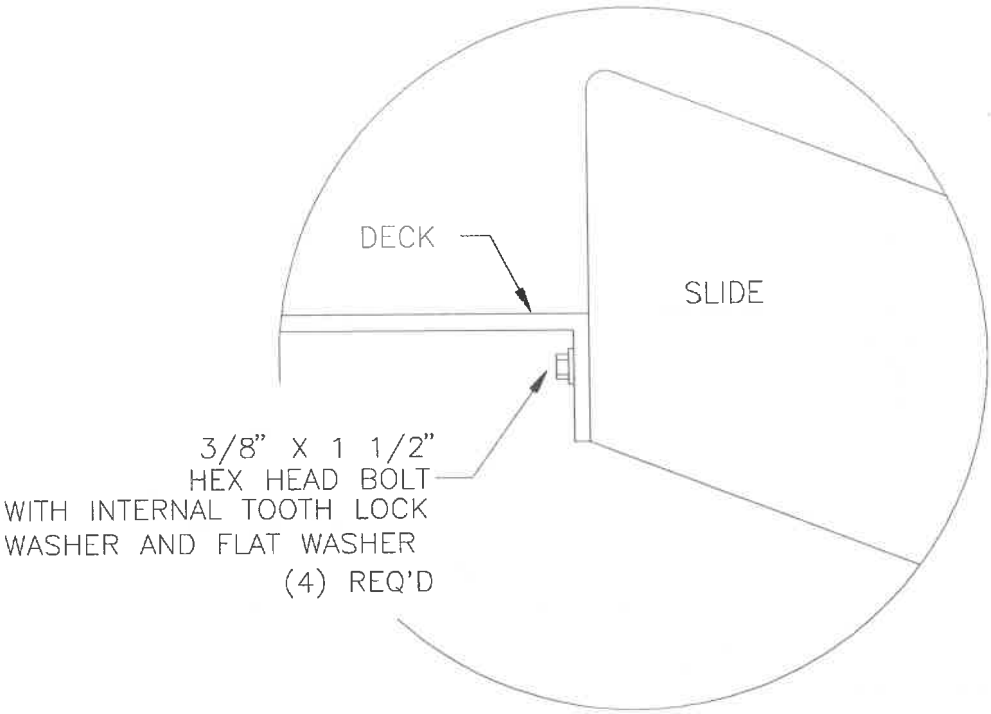

STEP 3	Set the height of the slide exit from the top of the protective surface.

Note: ***For slides from decks of 4 feet in height or less, the height of the exit region should be no more than 11 inches from the protective surface. For slides from decks that are over 4 feet in height, the height of the exit region should be at least 7 inches but not more than 15 inches above the protective surface. Be sure that exit region maintains enough of a slant to insure water drainage.***

STEP 4	Attach the stubs to the canopy.

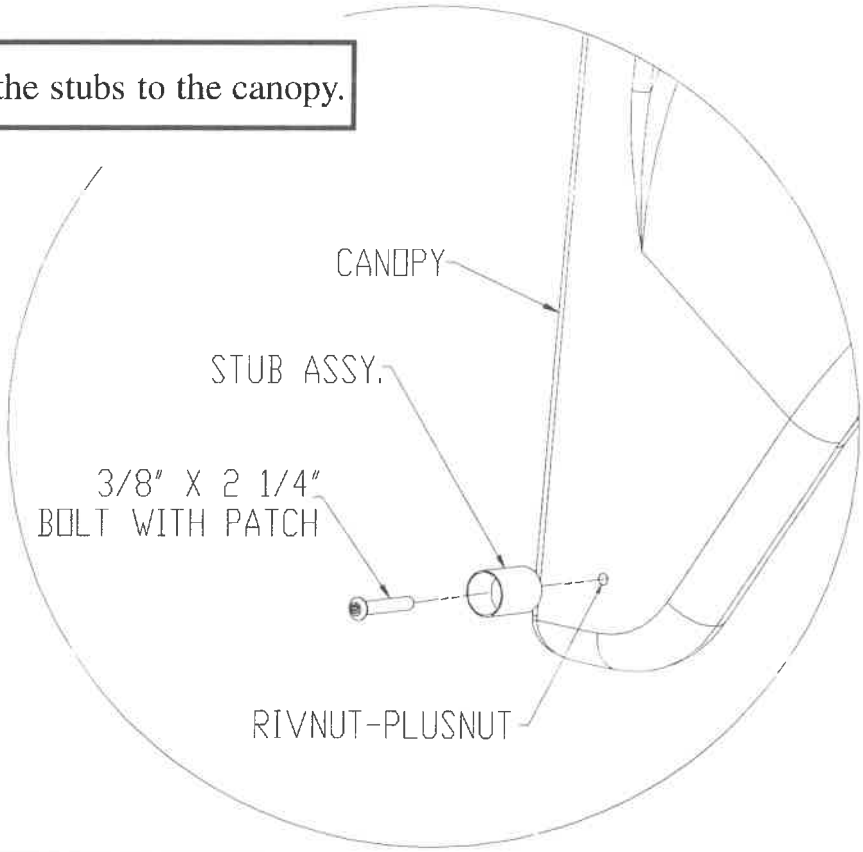

STEP 5	Insert handhold bar into canopy.

STEP 6	Attach handhold bar and stubs to posts with top clamps at 38" above deck surface.

Refer to *Versa-Lok® Clamp Assembly* Installation.

STEP 7	Tighten all set screws to secure bar sockets and canopy supports.

FINAL STEP	**Refer to *Final Assembly* Installation.**

MIRACLE
RECREATION EQUIPMENT COMPANY

INSTALLATION INSTRUCTIONS

IMAGINATION PANELS

714-714-1: Park Ranger
714-714-2: Fire Truck
714-714-3: Police
714-714-4: Train
714-714-5: Taxi

714-715-1: Alphabet
714-715-2: Maze Finger
714-715-3: Jump (3' Deck)
714-715-4: Calculator
714-715-5: Jump (5' Deck)
714-715-6: Bus Stop

714-732: Welcome (5-12)
714-732-1: Welcome (2-5)
714-732-2: Welcome (2-12)

July 16, 1997 Rev. C

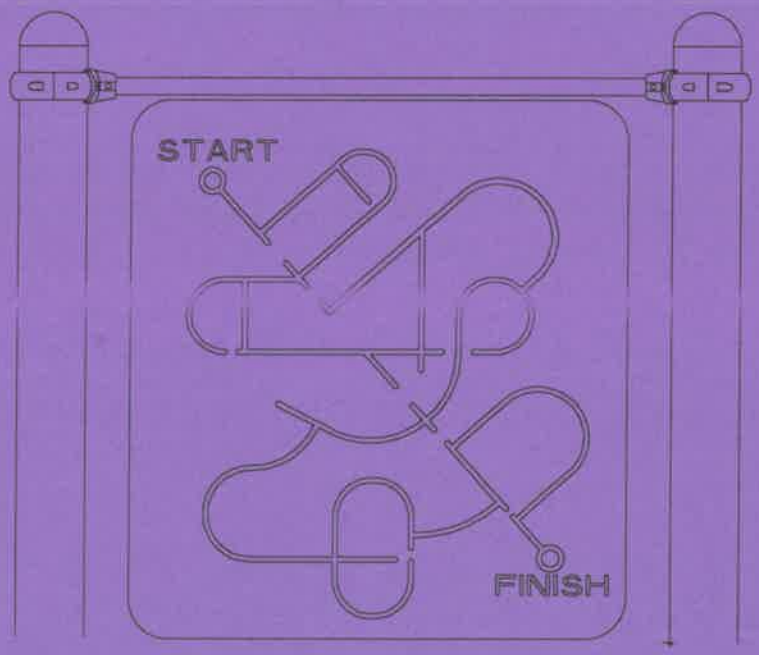

714-714-1
714-714-2
714-714-3
714-714-4
714-714-5
714-715-1
714-715-2 (shown)
714-715-3
714-715-4
714-715-5
714-715-6
714-732
714-732-1
714-732-2

IMPORTANT NOTES

1. Before installing or erecting this equipment, please read and comply with all applicable recommendations in Safety Brochure 100 enclosed. If for some reason this brochure is missing, contact your local Miracle sales representative for a copy.

2. Before starting construction, check with all utility companies for exact locations of underground utilities.

3. When designing areas for footings and the area under and adjacent to all equipment, consideration should be given to soil types and subgrade characteristics. The purchaser and/or installing contractor will be responsible for proper installation and insuring that abnormal and unsafe compaction does not occur in these areas, which are generally recommended to be under and a minimum of 6' out from the edges of all play structures.

4. It is the purchaser's responsibility to maintain these areas properly after installation. It is recommended that compaction tests be made several times per year. When compaction occurs, it is recommended that the area affected be scarified or additional pea gravel, sand, redwood bark or coarse wood chips be added until the area is soft and resilient.

STEP 1	Attach panel support rail to panel.

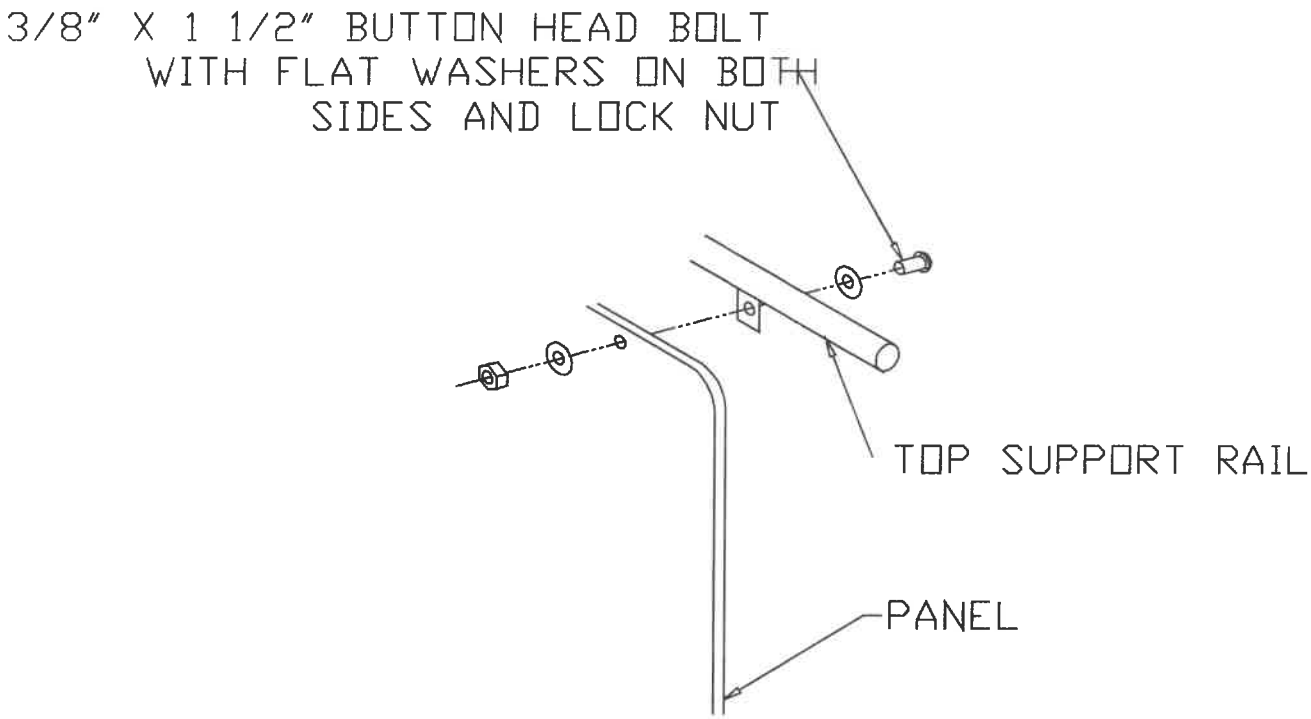

STEP 2	Insert each rung end into a bar socket and slide bar socket onto clamp half.

STEP 3	Attach each clamp assembly around one of the posts with center of clamps at 38" above deck surface, securing enclosure and bar sockets with set screws.

Refer to *Versa-Lok® Clamp Assembly* Installation.

(Important Note: If a post must "share duty" (i.e., support more than one component), all bar sockets and deck supports must be slid onto clamp halves before attaching the clamp assembly around the post.)

STEP 4	Attach bottom of panel to deck. (Remove any obstructing pvc from the corresponding bolt holes and bolt the bottom of the panel to the face of the deck.

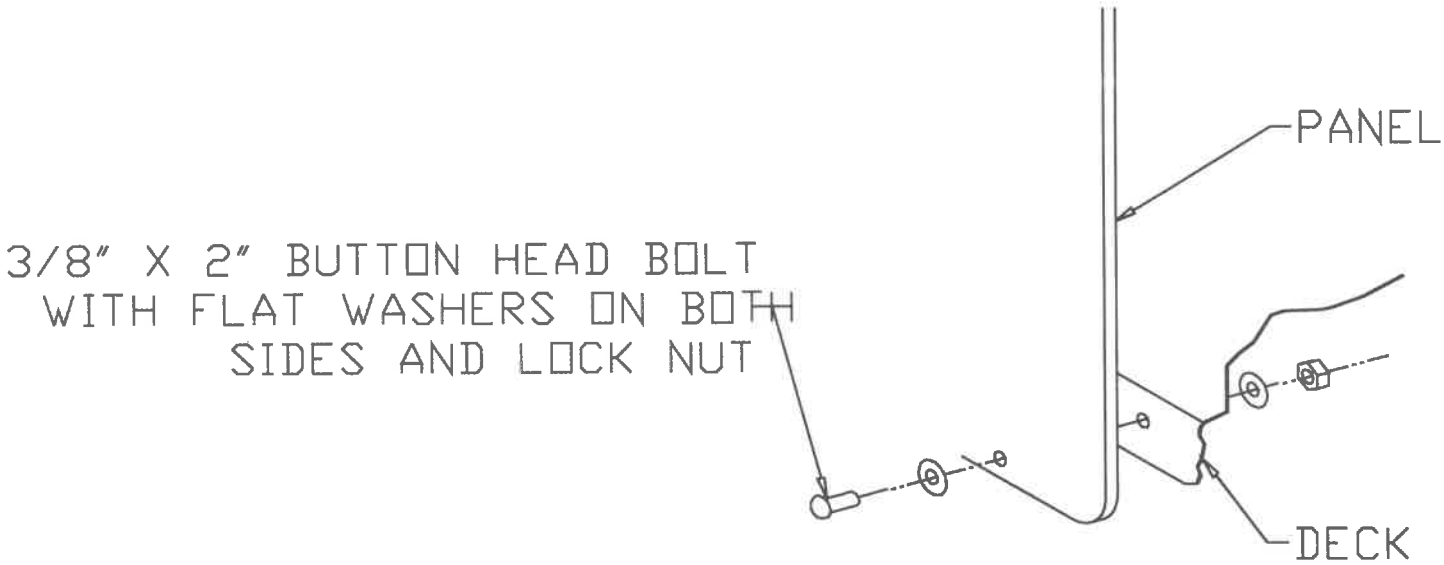

***For models without steering wheel, proceed to* FINAL STEP.**

For models with steering wheel, proceed to steps 5 and 6 following:

STEP 5	Attach wheel to panel.

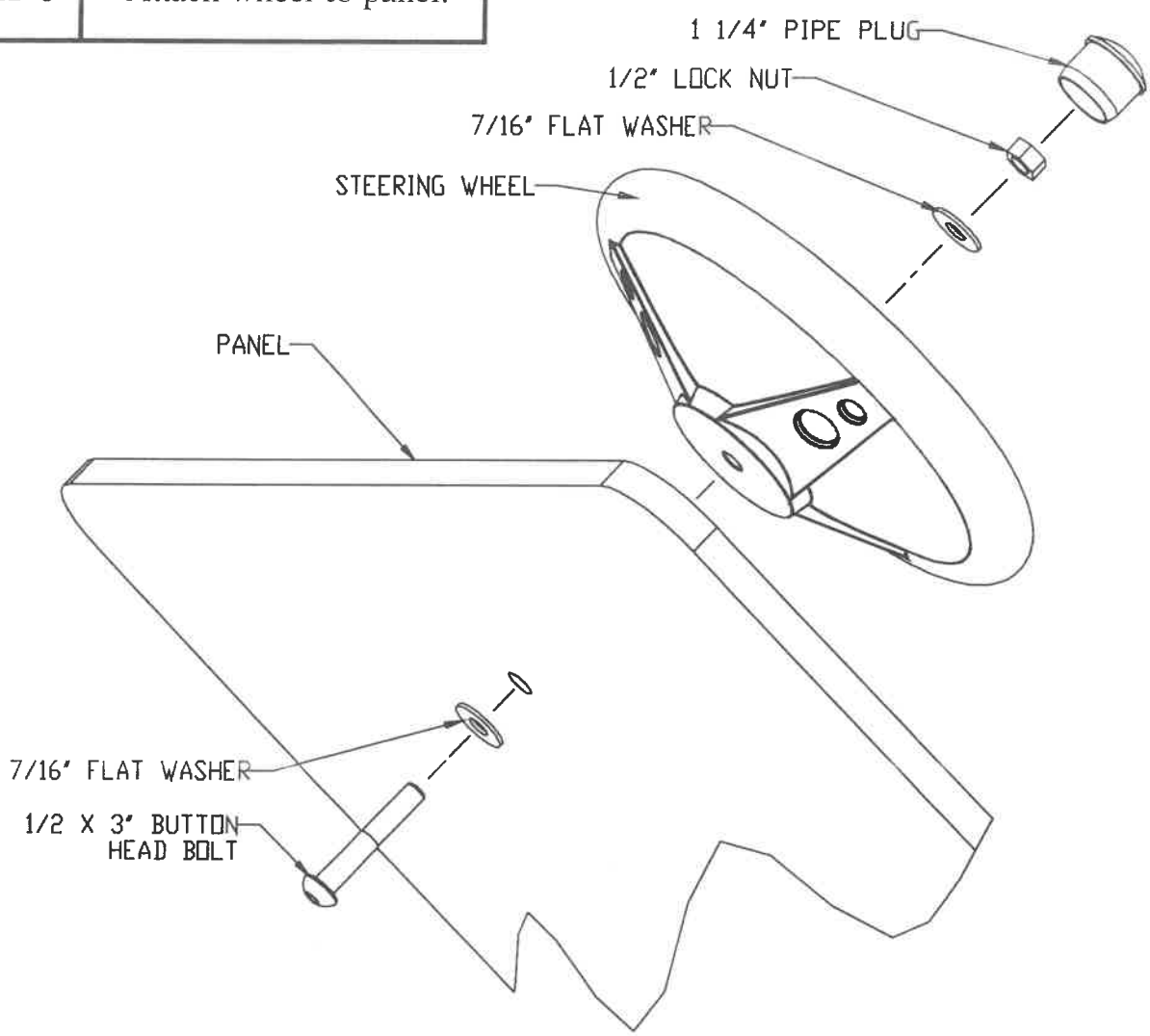

STEP 6	Attach center cover.

FINAL STEP	**Refer to *Final Assembly* Installation.**

MIRACLE
RECREATION EQUIPMENT COMPANY

INSTALLATION INSTRUCTIONS

PANEL MODELS

714-716: View Groove
714-875: Bubble
714-875-30: Look-Out
714-904: Clock
714-923: Color Ball
714-924: Letter Ball
714-925: Number Ball
714-980-4: Convex Mirror
714-980-5: Flat Mirror
714-982-2: Number Finger Maze
714-982-3: Finger Maze
714-982-4: Letter Finger Maze
714-983-1: Marble Race
714-983-2: Motor Skill

February 10, 1997 Rev. F

714-875

714-904

714-716

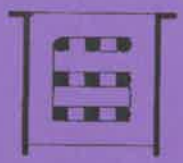

714-923

714-924

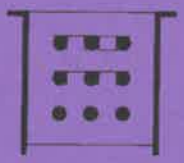

714-925

714-980-4
714-980-5

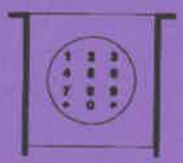

714-982-2

714-982-3

714-982-4

714-983-2

714-983-1

714-875-30

PANEL MODELS

714-716: View Groove	714-980-4: Convex Mirror
714-875: Bubble	714-980-5: Flat Mirror
714-875-30: Look-Out	714-982-2: Number Finger Maze
714-904: Clock	714-982-3: Finger Maze
714-923: Color Ball	714-982-4: Letter Finger Maze
714-924: Letter Ball	714-983-1: Marble Race
714-925: Number Ball	714-983-2: Motor Skill

February 10, 1997 Rev. F

IMPORTANT NOTES

1. Before installing or erecting this equipment, please read and comply with all applicable recommendations in Safety Brochure 100 enclosed. If for some reason this brochure is missing, contact your local Miracle sales representative for a copy.

2. Before starting construction, check with all utility companies for exact locations of underground utilities.

3. When designing areas for footings and the area under and adjacent to all equipment, consideration should be given to soil types and subgrade characteristics. The purchaser and/or installing contractor will be responsible for proper installation and insuring that abnormal and unsafe compaction does not occur in these areas, which are generally recommended to be under and a minimum of 6' out from the edges of all play structures.

4. It is the purchaser's responsibility to maintain these areas properly after installation. It is recommended that compaction tests be made several times per year. When compaction occurs, it is recommended that the area affected be scarified or additional pea gravel, sand, redwood bark or coarse wood chips be added until the area is soft and resilient.

INSTALLATION INSTRUCTIONS

PANEL MODELS

714-716: View Groove	714-980-4: Convex Mirror
714-875: Bubble	714-980-5: Flat Mirror
714-875-30: Look-Out	714-982-2: Number Finger Maze
714-904: Clock	714-982-3: Finger Maze
714-923: Color Ball	714-982-4: Letter Finger Maze
714-924: Letter Ball	714-983-1: Marble Race
714-925: Number Ball	714-983-2: Motor Skill

February 10, 1997 Rev. F

ASSEMBLY

1. Insert enclosures into panel sides.

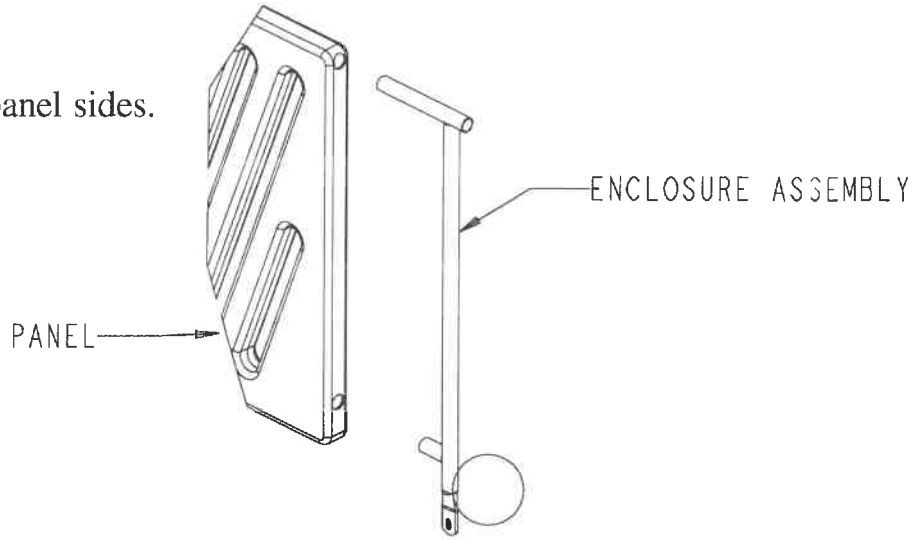

2. Position enclosures onto posts.

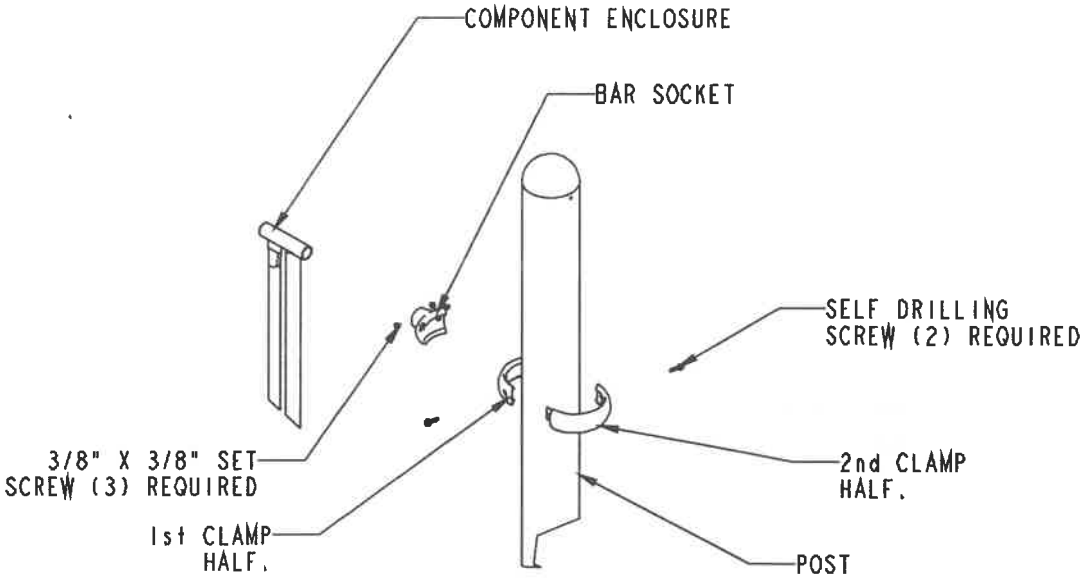

ASSEMBLE POST CLAMPS AND BAR SOCKET TOGETHER AS SHOWN USING THE COMPONENT ENCLOSURE TO LOCATE HEIGHT AND ROTATION.

INSTALLATION INSTRUCTIONS

PANEL MODELS

714-716: View Groove	714-980-4: Convex Mirror
714-875: Bubble	714-980-5: Flat Mirror
714-875-30: Look-Out	714-982-2: Number Finger Maze
714-904: Clock	714-982-3: Finger Maze
714-923: Color Ball	714-982-4: Letter Finger Maze
714-924: Letter Ball	714-983-1: Marble Race
714-925: Number Ball	714-983-2: Motor Skill

February 10, 1997 Rev. F

ASSEMBLY

3. Attach enclosures to deck.

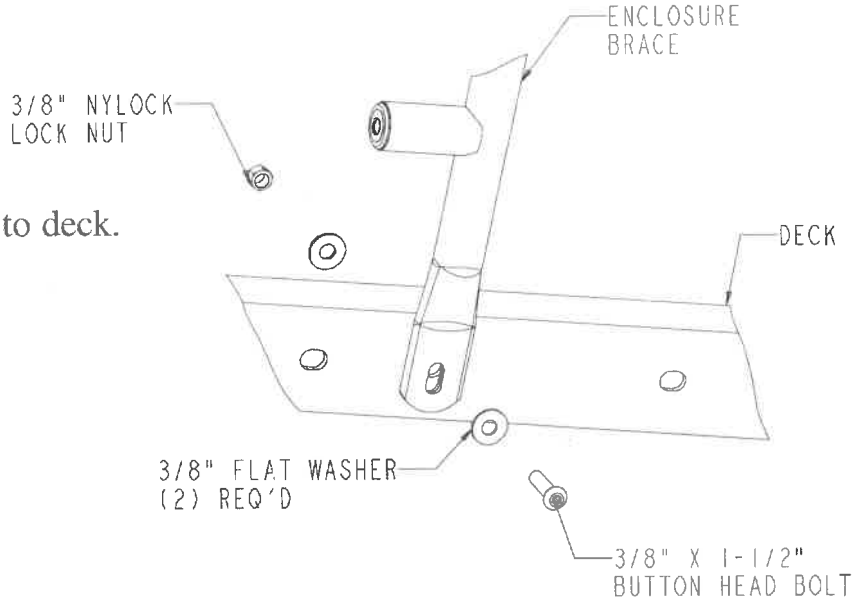

4. Attach enclosures to posts.

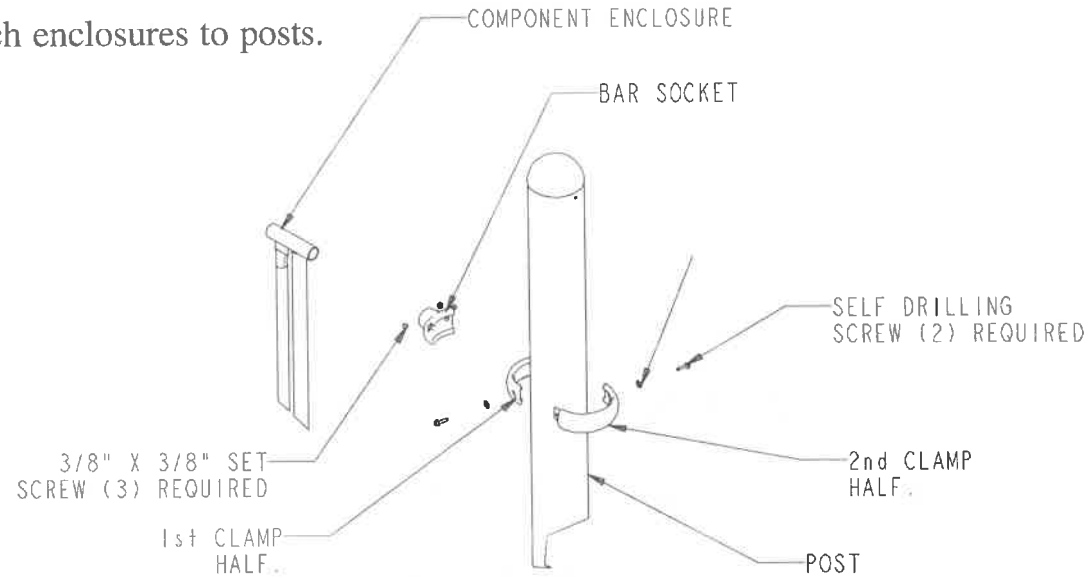

ASSEMBLE POST CLAMPS AND BAR SOCKET TOGETHER AS SHOWN USING THE COMPONENT ENCLOSURE TO LOCATE HEIGHT AND ROTATION.

PANEL MODELS

714-716: View Groove	714-980-4: Convex Mirror
714-875: Bubble	714-980-5: Flat Mirror
714-875-30: Look-Out	714-982-2: Number Finger Maze
714-904: Clock	714-982-3: Finger Maze
714-923: Color Ball	714-982-4: Letter Finger Maze
714-924: Letter Ball	714-983-1: Marble Race
714-925: Number Ball	714-983-2: Motor Skill

February 10, 1997 Rev. F

FINAL ASSEMBLY

4. Plumb and level the assembly.

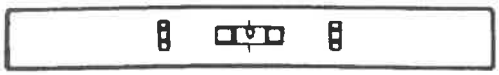

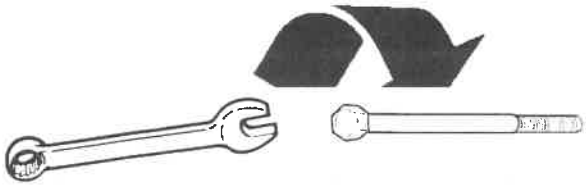

Make sure all fasteners are tight.

Trim all bolts. No more than two threads may protrude after trimming by installer.

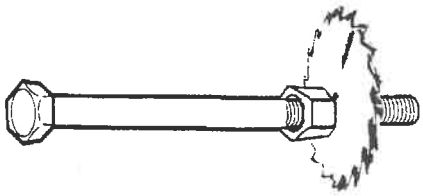

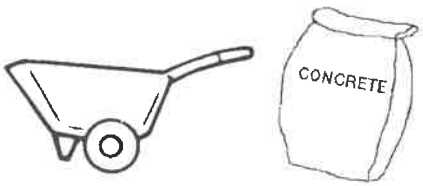

Pour concrete and allow 72 hours to cure.

Install 12" of cushioning material in and around the area required for the unit.

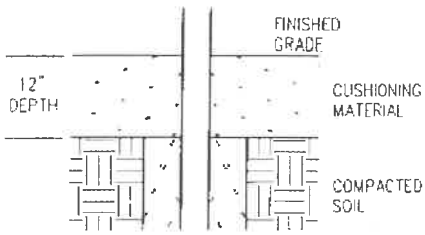

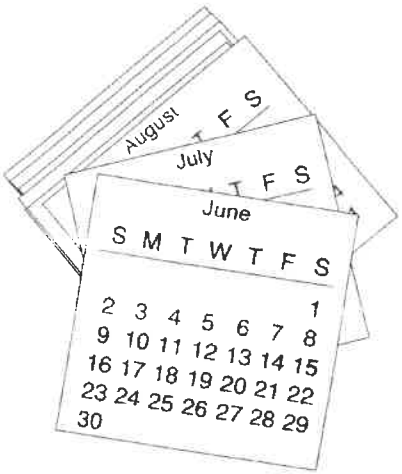

Establish a regular maintenance schedule, checking for loose or missing bolts, worn parts, etc.

PANEL MODELS

714-716: View Groove	714-980-4: Convex Mirror
714-875: Bubble	714-980-5: Flat Mirror
714-875-30: Look-Out	714-982-2: Number Finger Maze
714-904: Clock	714-982-3: Finger Maze
714-923: Color Ball	714-982-4: Letter Finger Maze
714-924: Letter Ball	714-983-1: Marble Race
714-925: Number Ball	714-983-2: Motor Skill

February 10, 1997 Rev. F

BILL OF MATERIALS

PART NO.	QTY-PER U/M	DESCRIPTION
MODEL 714-716		
713009P	1 EA	PARTS CARTON
982471P	2 EA	ENCLOSURE ASSEMBLY, ROCKITE PANEL
982467P	1 EA	PANEL ASSEMBLY, VIEW GROOVE
MODEL 714-875		
713009P	1 EA	PARTS CARTON
982471P	2 EA	ENCLOSURE ASSEMBLY, ROCKITE PANEL
982751P	1 EA	ROCKITE PANEL WITH BUBBLE
MODEL 714-875-30		
713009P	1 EA	PARTS CARTON
982471P	2 EA	ENCLOSURE ASSEMBLY, ROCKITE PANEL
983694P	1 EA	ROCKITE PANEL WITH BUBBLE
MODEL 714-904		
713009P	1 EA	PARTS CARTON
982471P	2 EA	ENCLOSURE ASSEMBLY, ROCKITE PANEL
982752P	1 EA	CLOCK PANEL ASSEMBLY
MODEL 714-923		
713009P	1 EA	PARTS CARTON
982471P	2 EA	ENCLOSURE ASSEMBLY, ROCKITE PANEL
982566P	1 EA	PANEL ASSEMBLY, BALL COLOR
MODEL 714-924		
713009P	1 EA	PARTS CARTON
982471P	2 EA	ENCLOSURE ASSEMBLY, ROCKITE PANEL
982565P	1 EA	PANEL ASSEMBLY, BALL LETTER
MODEL 714-925		
713009P	1 EA	PARTS CARTON
982471P	2 EA	ENCLOSURE ASSEMBLY, ROCKITE PANEL
982564P	1 EA	PANEL ASSEMBLY, BALL NUMBER
MODEL 714-980-4		
713009P	1 EA	PARTS CARTON
982471P	2 EA	ENCLOSURE ASSEMBLY, ROCKITE PANEL
982758P	1 EA	PANEL ASSEMBLY, MIRROR, CONVEX

INSTALLATION INSTRUCTIONS

PANEL MODELS

714-716: View Groove	714-980-4: Convex Mirror
714-875: Bubble	714-980-5: Flat Mirror
714-875-30: Look-Out	714-982-2: Number Finger Maze
714-904: Clock	714-982-3: Finger Maze
714-923: Color Ball	714-982-4: Letter Finger Maze
714-924: Letter Ball	714-983-1: Marble Race
714-925: Number Ball	714-983-2: Motor Skill

February 10, 1997 Rev. F

PART NO.	QTY-PER U/M	DESCRIPTION
MODEL 714-980-5		
713009P	1 EA	PARTS CARTON
982471P	2 EA	ENCLOSURE ASSEMBLY, ROCKITE PANEL
982757P	1 EA	PANEL ASSEMBLY, MIRROR, FLAT
MODEL 714-982-2		
713009P	1 EA	PARTS CARTON
982471P	2 EA	ENCLOSURE ASSEMBLY, ROCKITE PANEL
982759P	1 EA	PANEL ASSEMBLY, FINGER MAZE,-NUMBER
MODEL 714-982-3		
713009P	1 EA	PARTS CARTON
982471P	2 EA	ENCLOSURE ASSEMBLY, ROCKITE PANEL
982756P	1 EA	PANEL ASSEMBLY, FINGER MAZE
MODEL 714-982-4		
713009P	1 EA	PARTS CARTON
982471P	2 EA	ENCLOSURE ASSEMBLY, ROCKITE PANEL
982755P	1 EA	PANEL ASSEMBLY, FINGER MAZE - ALPHABET
MODEL 714-983-1		
713009P	1 EA	PARTS CARTON
982471P	2 EA	ENCLOSURE ASSEMBLY, ROCKITE PANEL
982753P	1 EA	PANEL ASSEMBLY, MARBLE RACES
MODEL 714-983-2		
713009P	1 EA	PARTS CARTON
982471P	2 EA	ENCLOSURE ASSEMBLY, ROCKITE PANEL
982754P	1 EA	PANEL ASSEMBLY, MOTOR SKILLS

BILL OF MATERIALS:

PARTS CARTONS

PARTS CARTON (713009P) CONTENTS :

104285	6 EA	SETSCREW, SOCKET, 3/8-16 X 3/8, SS
104166	2 EA	BOLT, BHD, 3/8-16 X 1-1/2, SOCKET, SS
110030	2 EA	NUT, NYLOCK LOCK, 3/8-16
117005	4 EA	WASHER, FLAT, 3/8, SS
713101P	2 EA	BAR SOCKET, SLIDING, KC CLAMP

MIRACLE
RECREATION EQUIPMENT COMPANY

INSTALLATION INSTRUCTIONS

Model 714-723: Burma Bridge, 8'
Model 714-723-12: Burma Bridge, 12'

May 16, 1997 Rev. A

BURMA BRIDGE
MODEL 714723

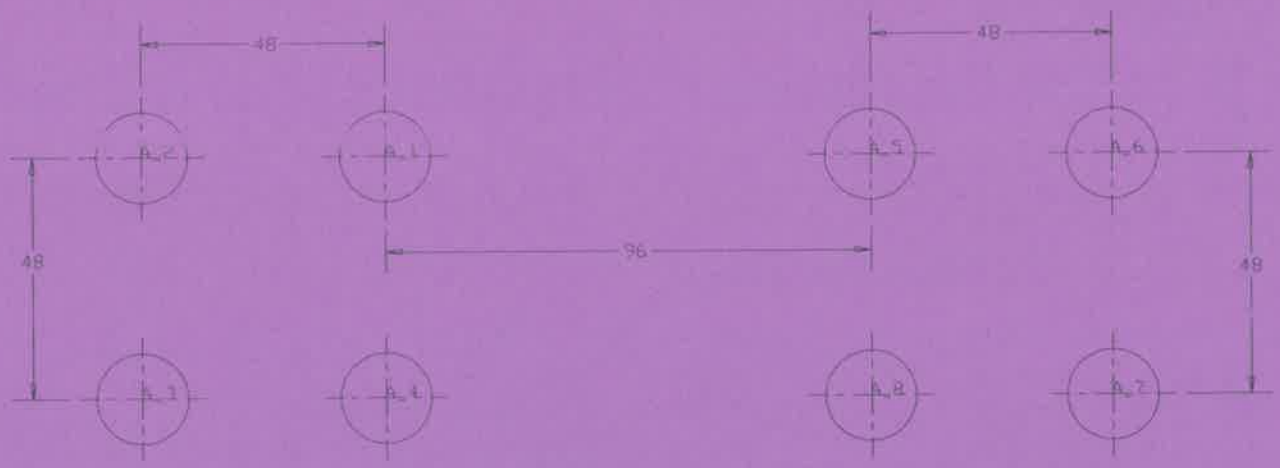

18" DIA X 30" DEEP FOOTINGS
8 REQUIRED

BURMA BRIDGE
MODEL 71472312

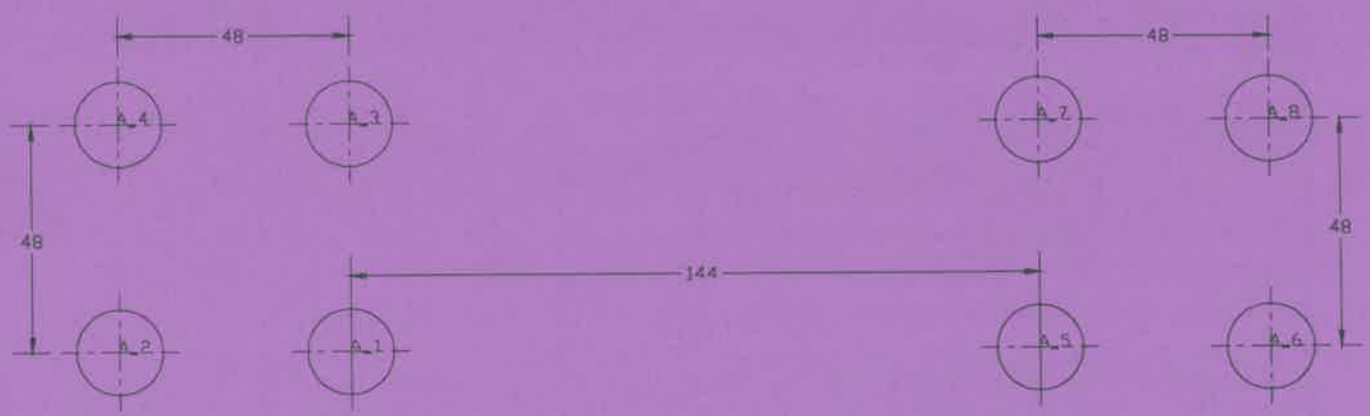

18" DIA x 30' DEEP FOOTINGS
8 REQUIRED

IMPORTANT NOTES

1. After completion of a Burma Bridge, all bolts connecting the bridge boards together must have their exposed threaded ends peened. This is to prevent loosening of the 1/2" lock nuts. **This must be done.**

2. Before installing or erecting this equipment, please read and comply with all applicable recommendations in Safety Brochure 100 enclosed. If for some reason this brochure is missing, contact your local Miracle sales representative for a copy.

3. Before starting construction, check with all utility companies for exact locations of underground utilities.

4. When designing areas for footings and the area under and adjacent to all equipment, consideration should be given to soil types and subgrade characteristics. The purchaser and/or installing contractor will be responsible for proper installation and insuring that abnormal and unsafe compaction does not occur in these areas, which are generally recommended to be under and a minimum of 6' out from the edges of all play structures.

5. It is the purchaser's responsibility to maintain these areas properly after installation. It is recommended that compaction tests be made several times per year. When compactions occurs, it is recommended that the area affected be scarified or additional pea gravel, sand, redwood bark or coarse wood shavings be added until the area is soft and resilient.

FOOTINGS

Refer to *"Footing Detail" Installation Instructions* for decks.

Note: ***Do not pour concrete for footings until all components in your deck system have been installed per installation instructions, leveled, plumbed and braced in position.***

ASSEMBLY

1. Drill obstructing pvc from deck and bridge section mating holes.

2. Position bridge section(s) and decks, and attach as shown.

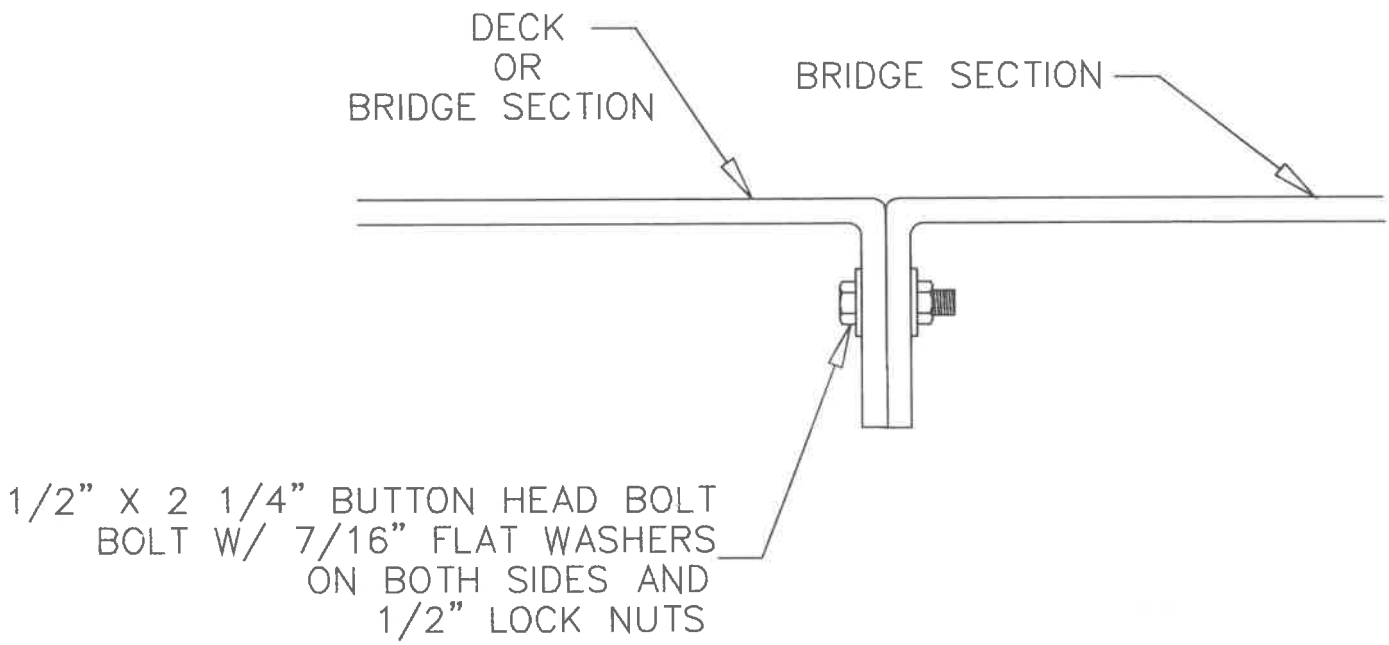

ASSEMBLY

3. Insert a deck enclosure into a bar socket and position clamp assembly to post. Repeat for all deck enclosures.

Refer to *Assembly Insert for the new Versa-lok® Clamp .*

4. Attach deck enclosures to decks.

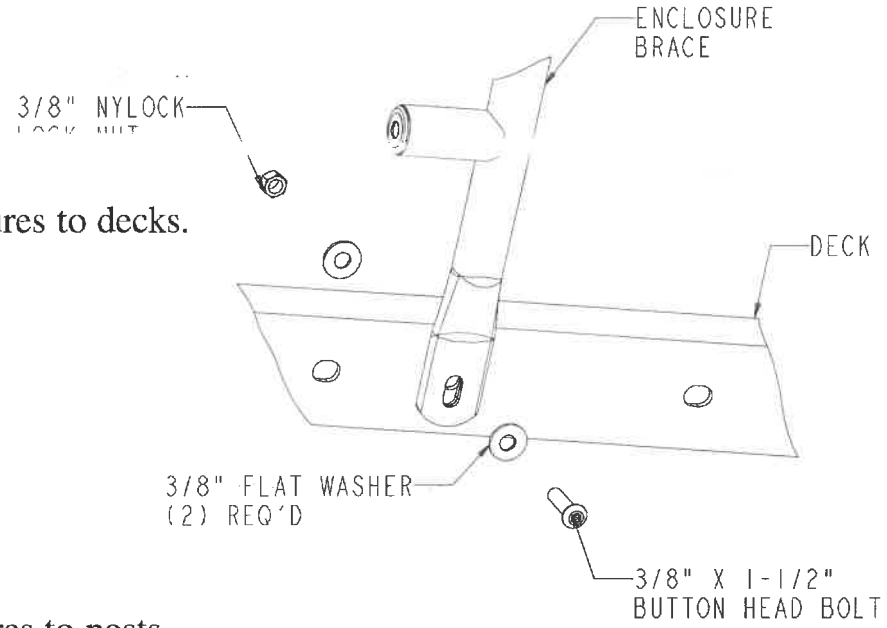

5. Attach deck enclosures to posts.

ASSEMBLY

6. Attach handrails to deck enclosures.

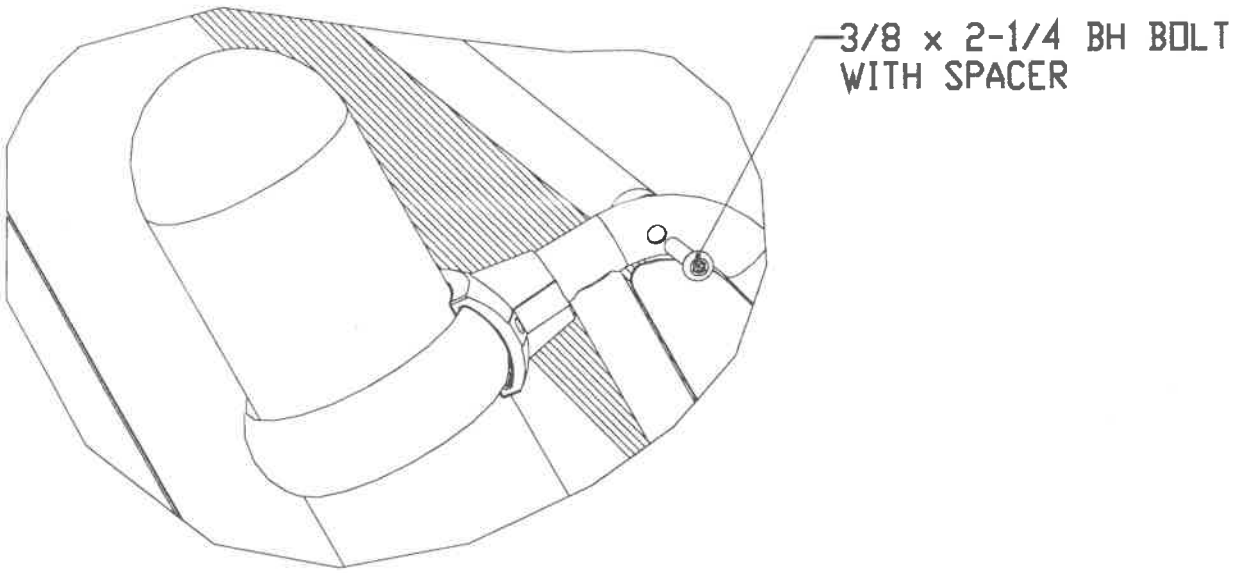

7. Attach handrails to bridge assembly.

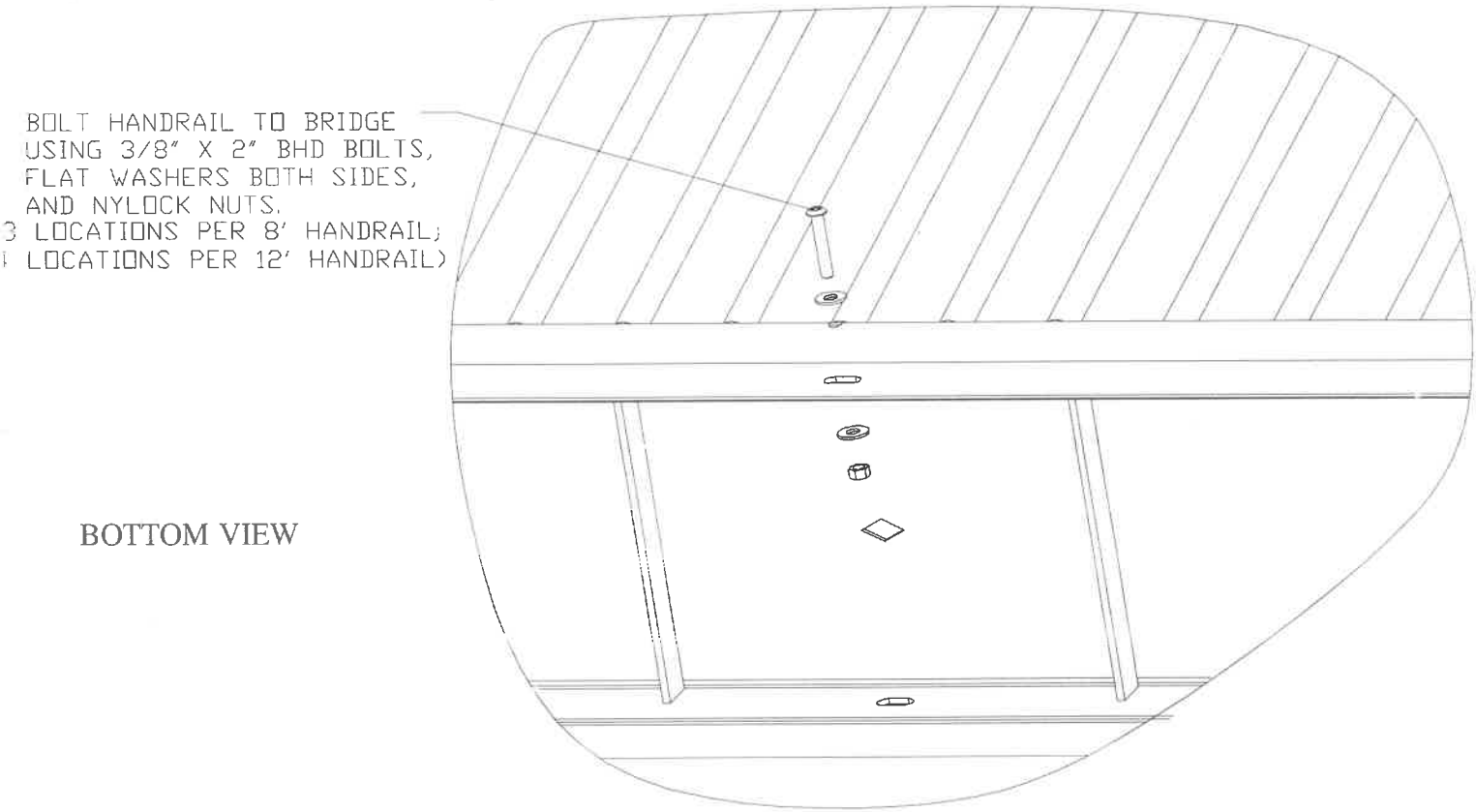

MIRACLE
RECREATION EQUIPMENT COMPANY

INSTALLATION INSTRUCTIONS

714-730: Treehouse Roof for Octagon Deck
714-730-6: Treehouse Roof for Hex Deck

September 15, 1997 Rev. 4

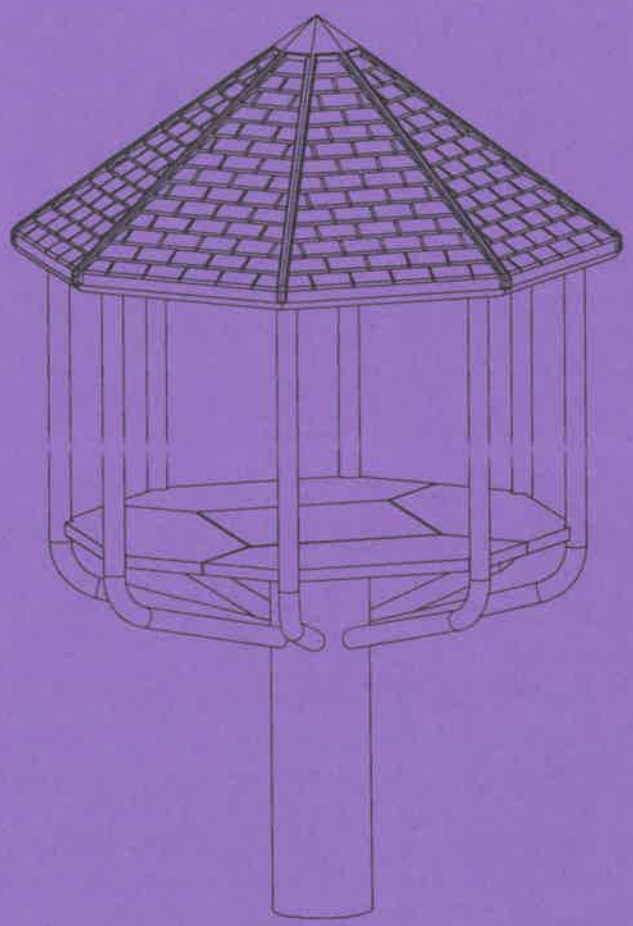

714-730 (shown on deck)
714-730-6

IMPORTANT NOTES

1. Before installing or erecting this equipment, please read and comply with all applicable recommendations in Safety Brochure 100 enclosed. If for some reason this brochure is missing, contact your local Miracle sales representative for a copy.

2. Before starting construction, check with all utility companies for exact locations of underground utilities.

3. When designing areas for footings and the area under and adjacent to all equipment, consideration should be given to soil types and subgrade characteristics. The purchaser and/or installing contractor will be responsible for proper installation and insuring that abnormal and unsafe compaction does not occur in these areas, which are generally recommended to be under and a minimum of 6' out from the edges of all play structures.

4. It is the purchaser's responsibility to maintain these areas properly after installation. It is recommended that compaction tests be made several times per year. When compaction occurs, it is recommended that the area affected be scarified or additional pea gravel, sand, redwood bark or coarse wood chips be added until the area is soft and resilient.

FOOTINGS

No additional footings are required for this component. For information concerning deck footings, refer to *Installation Instructions* for deck models.

STEP 1	On deck surface, assemble roof sections.

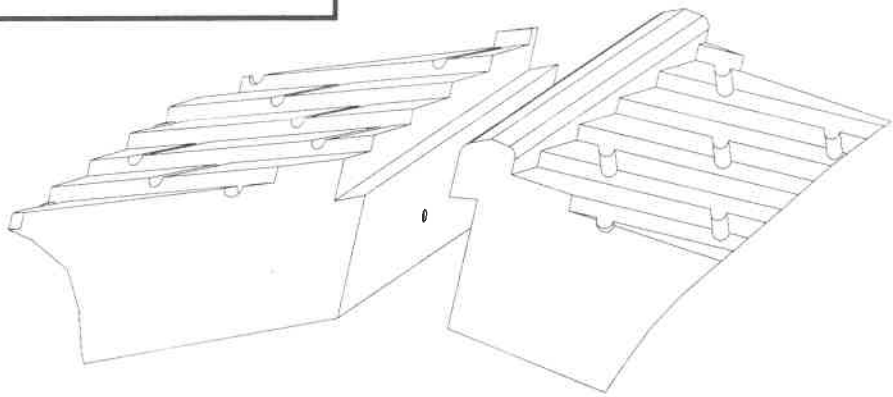

(Roof sections assemble flush by overlap and groove fittings.)

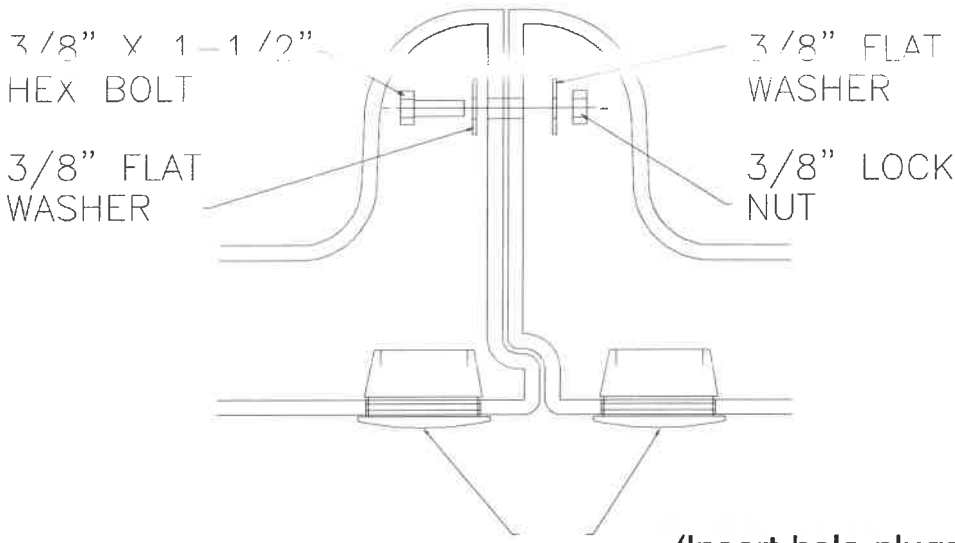

(Insert hole plugs after roof is attached to posts.)

STEP 2	Insert mount receivers into top of posts.

STEP 3	Lay roof on top of receivers. Center roof and square receivers.

STEP 4	Using receiver holes as a guide, mark 4 hole locations on roof at each receiver location.

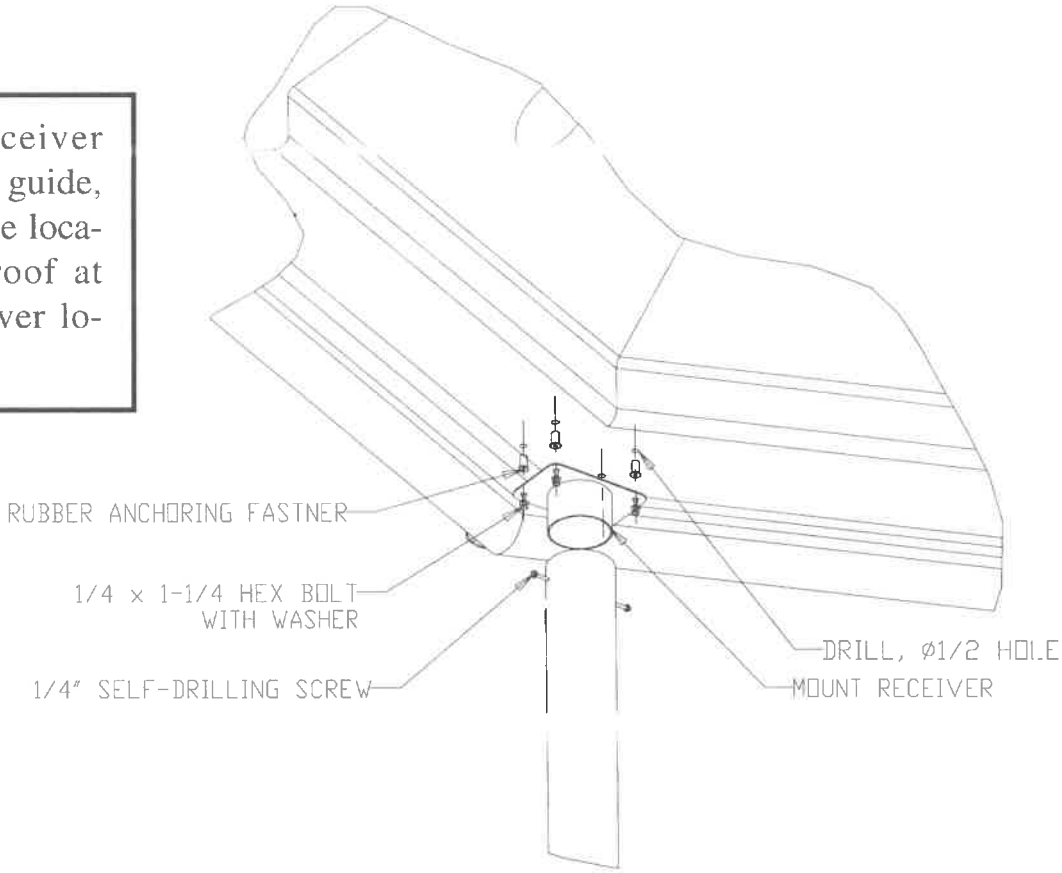

STEP 5	Remove roof and drill 1/2" diameter holes at each mark. Set rubber anchoring fastener into each hole.

STEP 6	Reset roof on receivers and assemble.

STEP 7	Secure receiver to posts.

STEP 8	Insert 4" hole plugs.

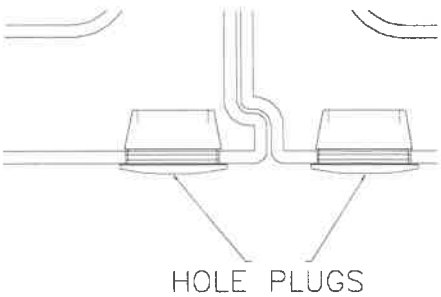

FINAL STEP	**Refer to *Final Assembly* Installation.**

WAVE AND HURRICANE SLIDES

April 2, 1998 Rev. G

TOP VIEW

FOOTING LAYOUT

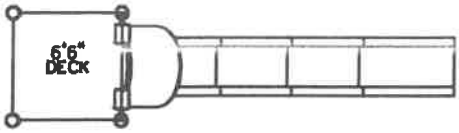

HURRICANE SLIDE 714-827-2

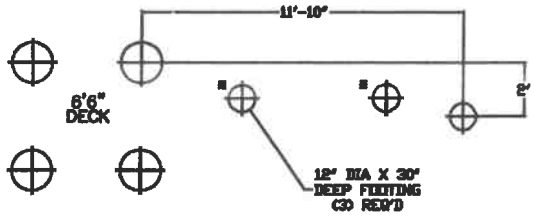

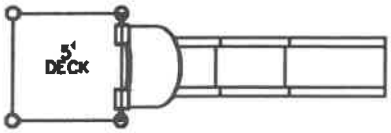

HURRICANE SLIDE 714-828-2

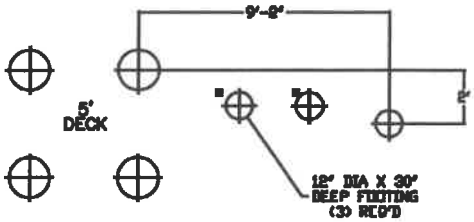

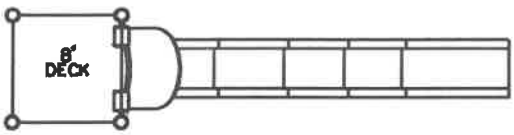

HURRICANE SLIDE 714-829-2 *

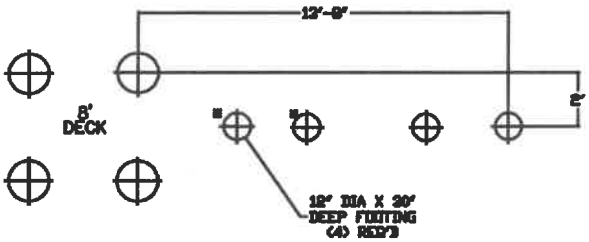

* LOCATE ON SITE

INSTALLATION DRAWING 714-800-2

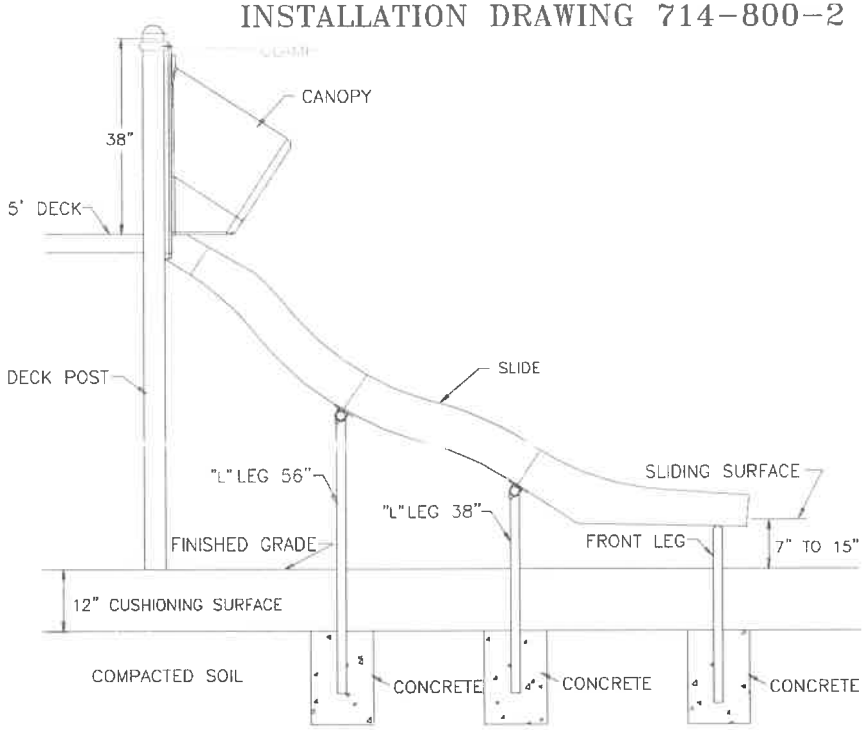

INSTALLATION DRAWING 714-801-2

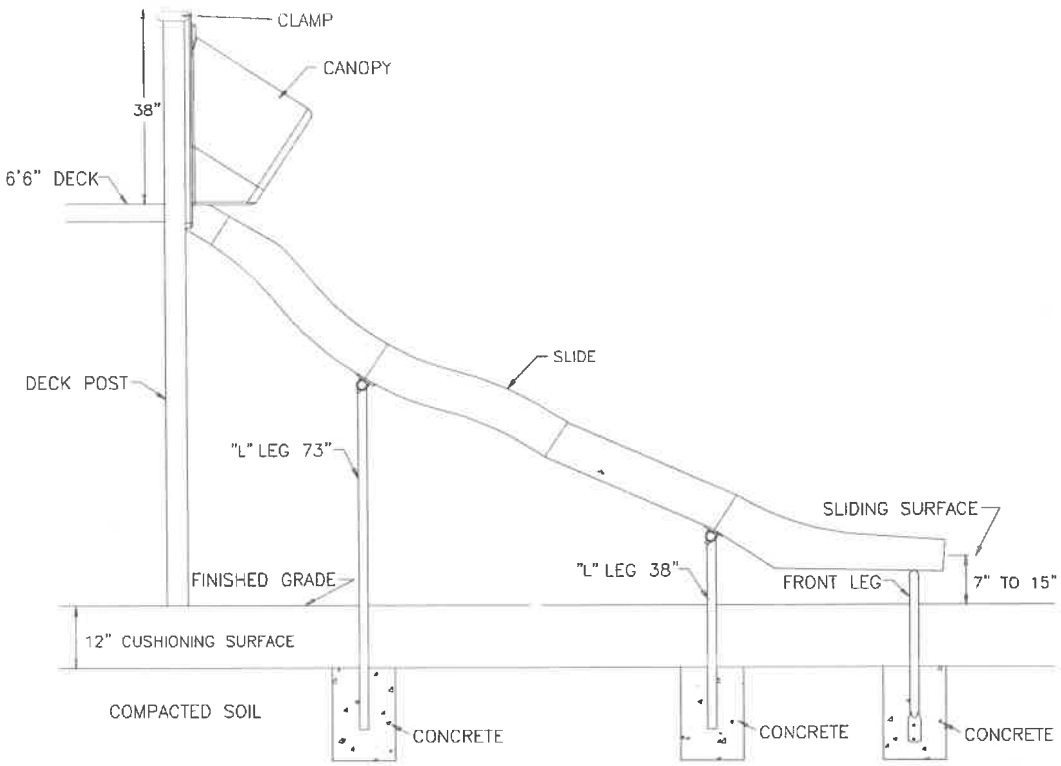

INSTALLATION DRAWING 714-827-2

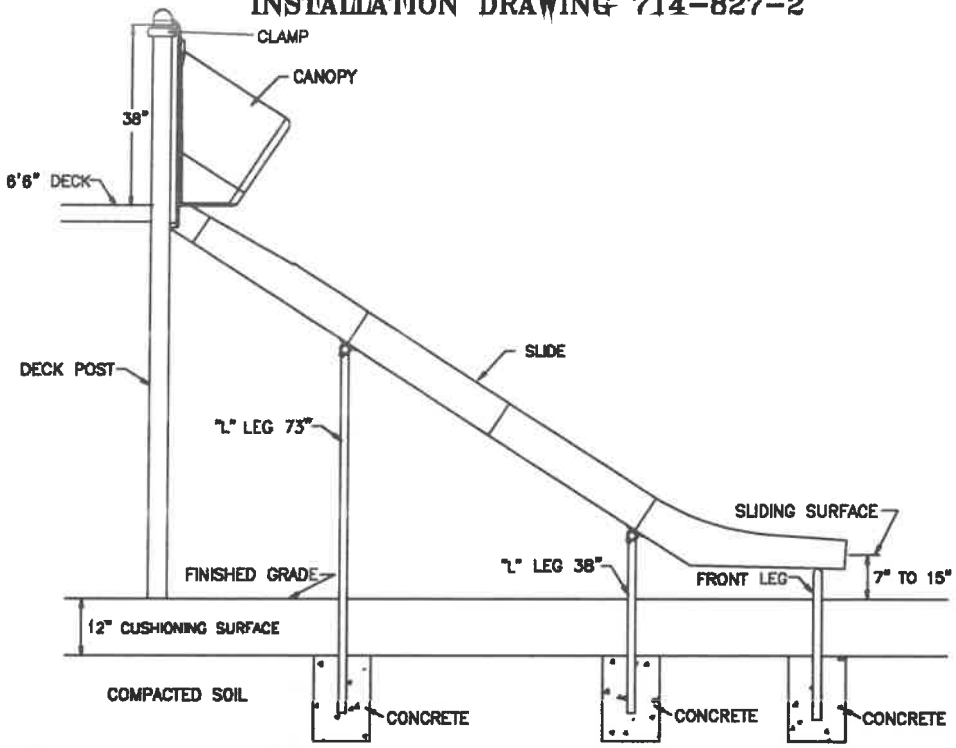

INSTALLATION DRAWING 714-828-2

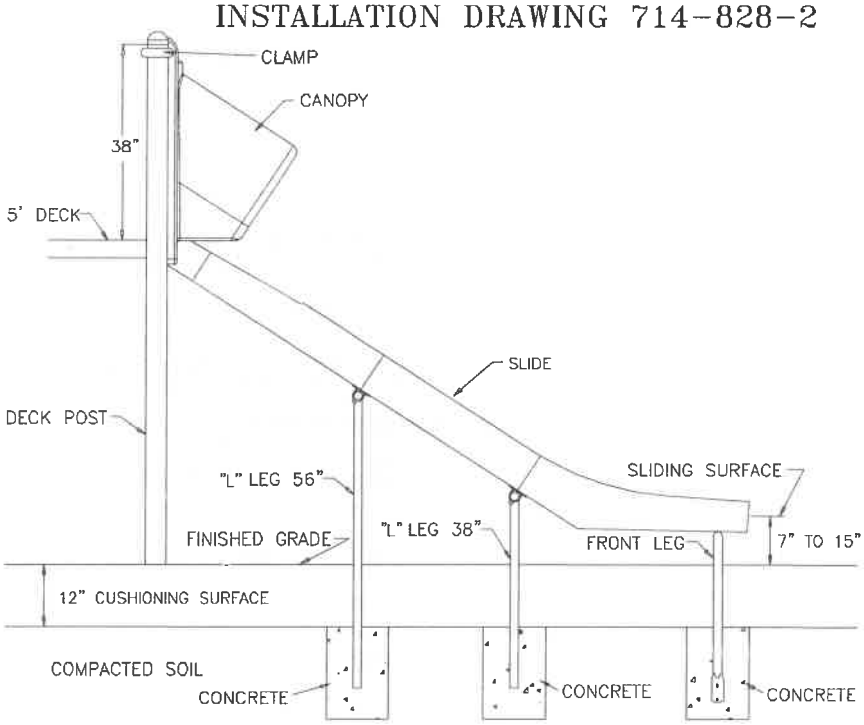

INSTALLATION DRAWING 714-829-2

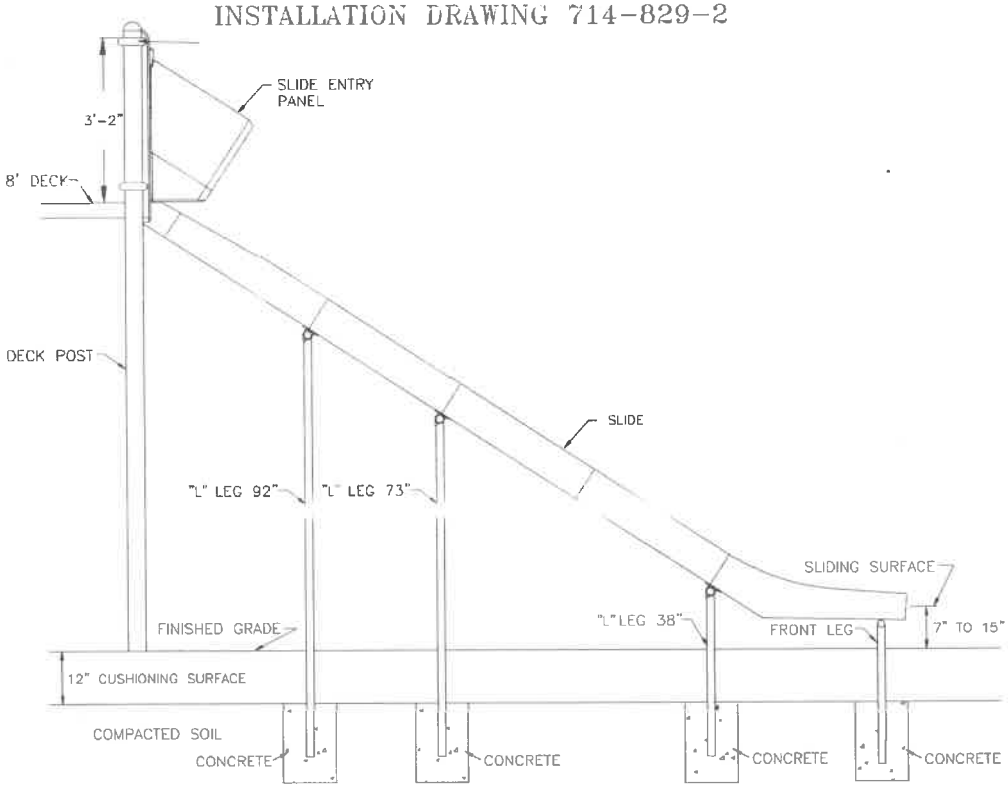

INSTALLATION DRAWING 714-802-2

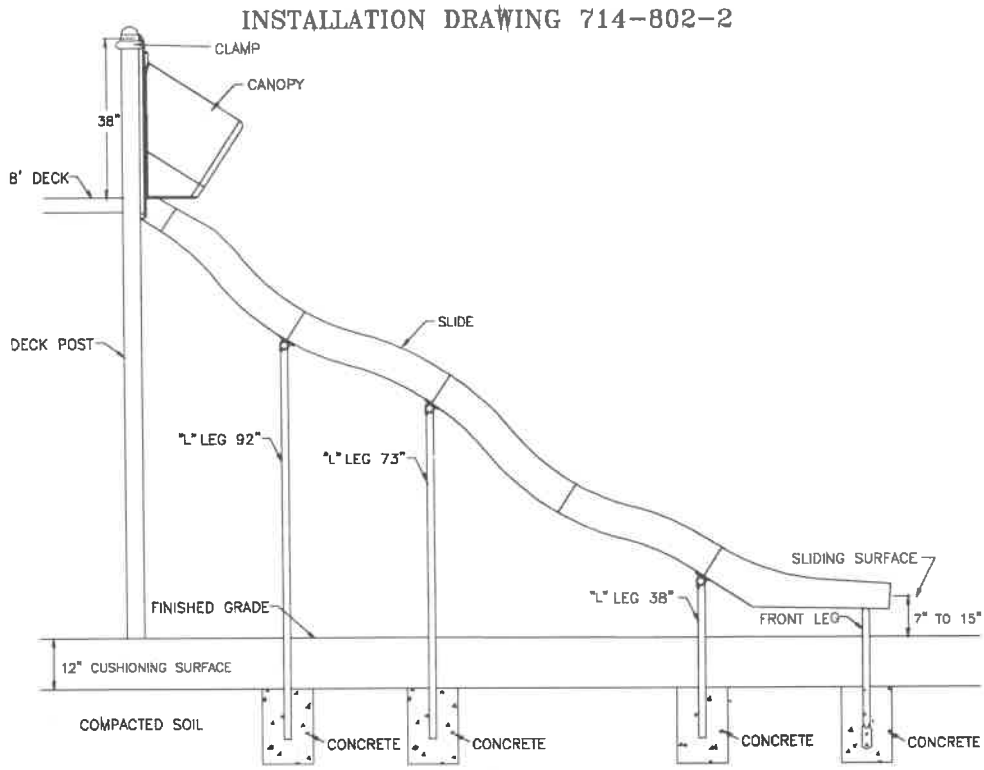

SLIDE SECTION ASSEMBLY DETAIL

MODEL 714-800-2

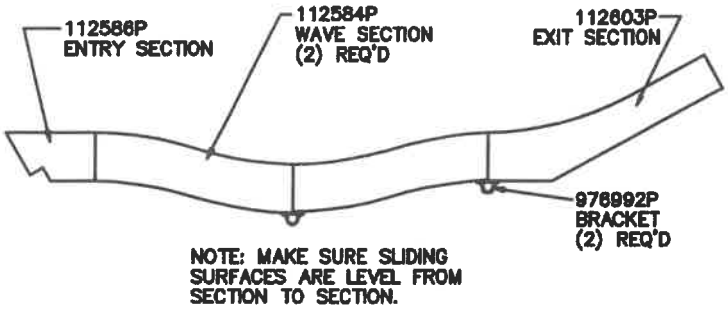

MODEL 714-801-2

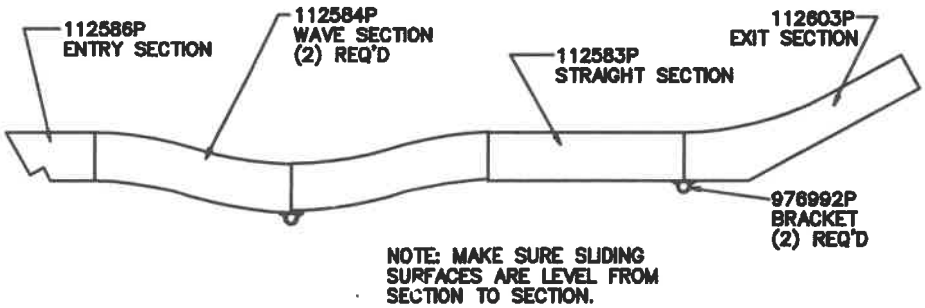

MODEL 714-802-2

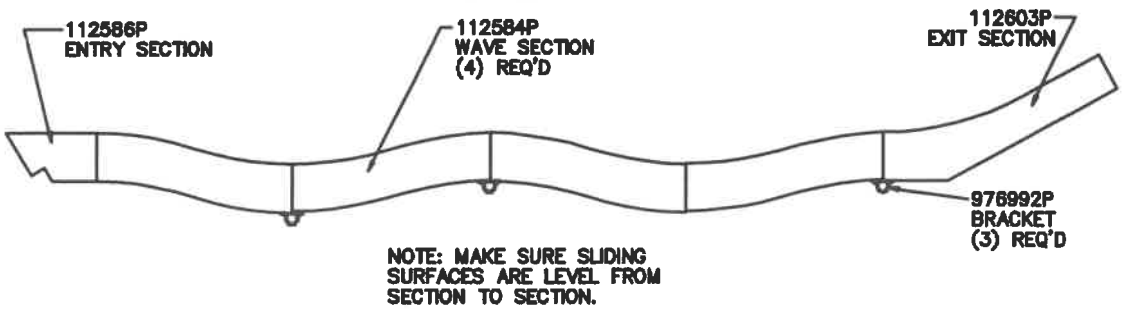

SLIDE SECTION ASSEMBLY DETAIL

MODEL 714-827-2

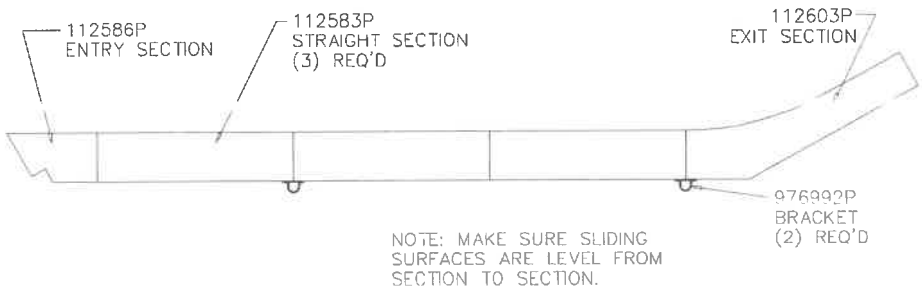

MODEL 714-828-2

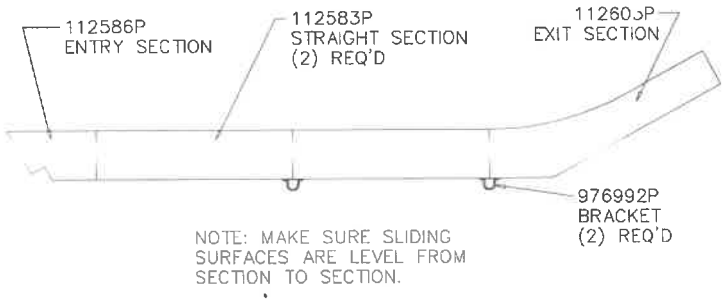

MODEL 714-829-2

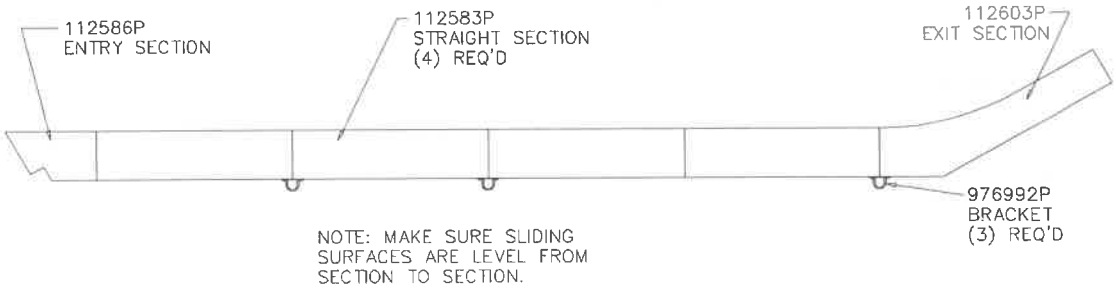

IMPORTANT NOTES

1. Before installing or erecting this equipment, please read and comply with all applicable recommendations in Safety Brochure 100 enclosed. If for some reason this brochure is missing, contact your local Miracle sales representative for a copy.

2. Before starting construction, check with all utility companies for exact locations of underground utilities.

3. When designing areas for footings and the area under and adjacent to all equipment, consideration should be given to soil types and subgrade characteristics. The purchaser and/or installing contractor will be responsible for proper installation and insuring that abnormal and unsafe compaction does not occur in these areas, which are generally recommended to be under and a minimum of 6' out from the edges of all play structures.

4. It is the purchaser's responsibility to maintain these areas properly after installation. It is recommended that compaction tests be made several times per year. When compactions occurs, it is recommended that the area affected be scarified or additional pea gravel, sand, redwood bark or coarse wood shavings be added until the area is soft and resilient.

FOOTINGS

Locate and dig footing for the legs as shown. Locations for leg footings must be determined during assembly process.

Refer to *Footing Details* Installation

Note: ***Do not pour concrete for component activity footings until all components in your deck system have been installed per installation instructions, leveled, plumbed and braced in position.***

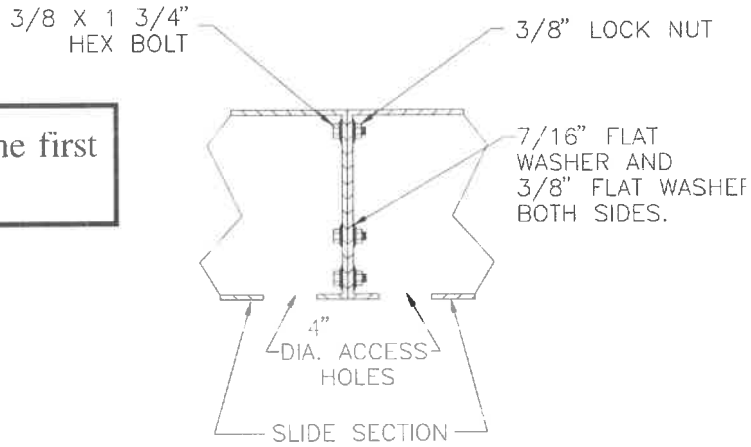

STEP 1	Attach the entry section to the first slide section.

Note: Use a cordless or air-powered ratchet to tighten nut. Before tightening make sure sliding surface is flush from section to section.

NOTE: PLUG EACH ACCESS HOLE
WITH 103543P 4"
PLUG AFTER ASSEMBLY

STEP 2	Attach next slide section(s) in the same manner as in step #1.

STEP 3	Plug each access hole with a 4" plug after assembly.

STEP 4	(Refer to Slide Section Assembly Detail for bedway bracket locations.) Attach bedway bracket to bottom of slide. Tighten securely.

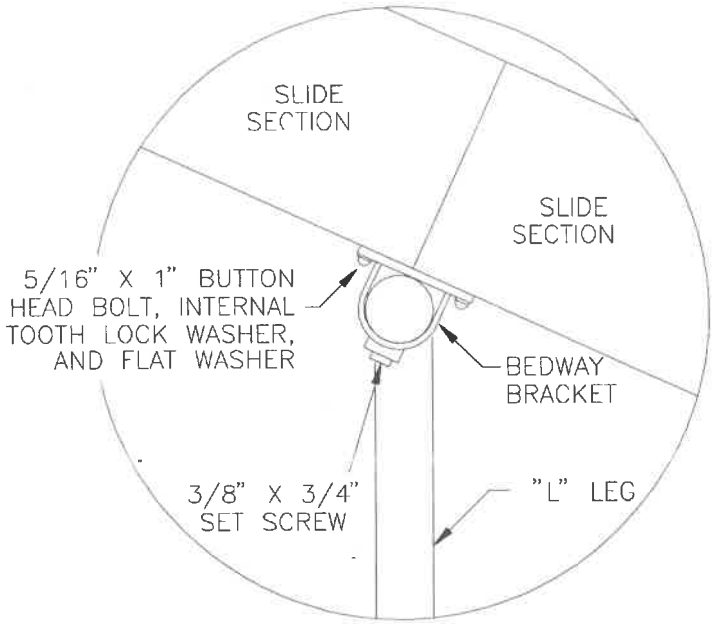

STEP 5	Attach front leg to bottom of slide exit.

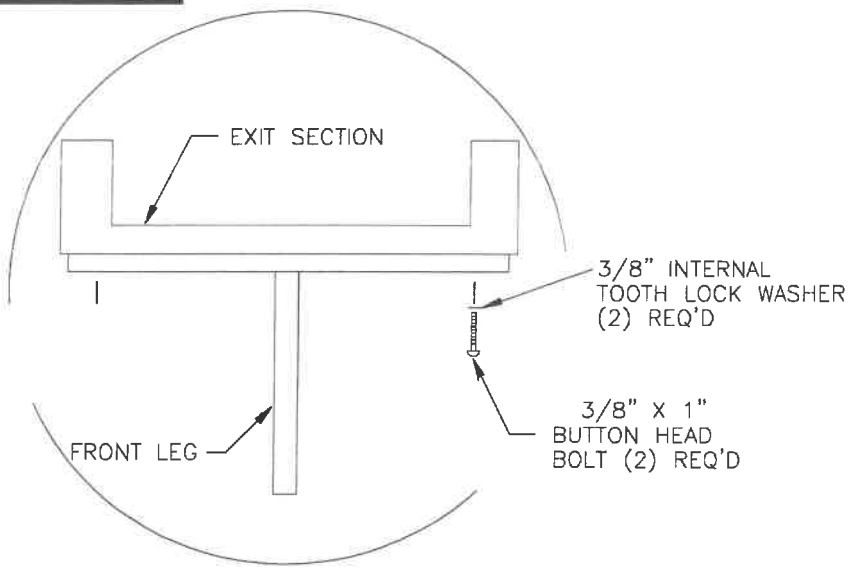

STEP 6	With a 9/16" drill bit, remove pvc from two (2) sets of holes, on the slide side of the pvc deck, located 7" and 22" apart and centered .

STEP 7	Set front leg in footing and attach slide to deck. Tighten securely.

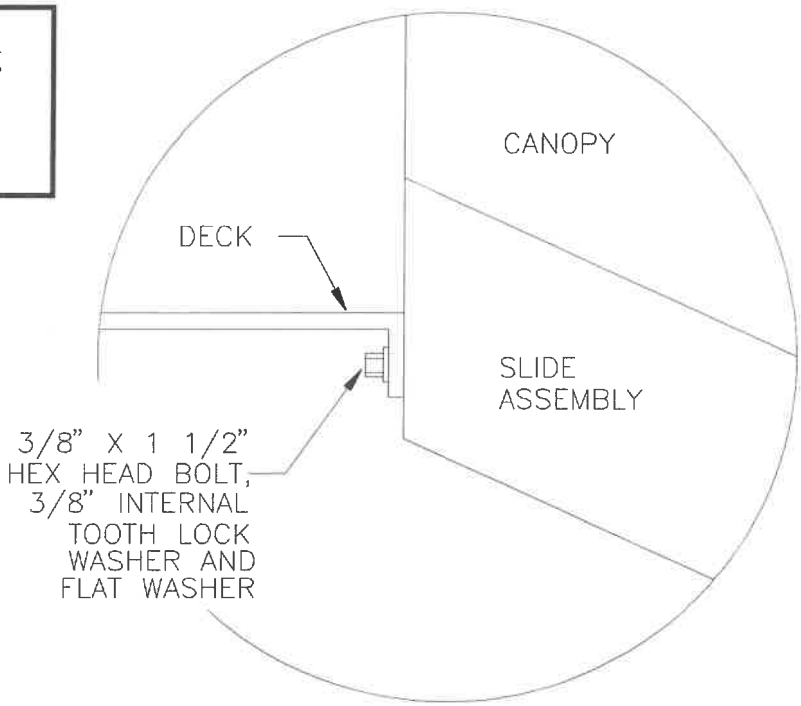

STEP 8	Plumb the center of the bedway brackets and dig the leg footings 9" off center.

STEP 9	Set legs in footings and secure to the bedway brackets.

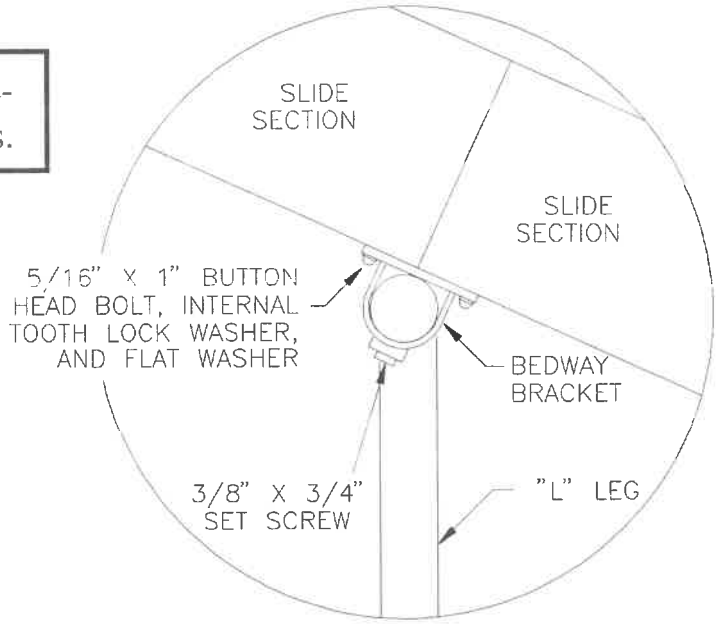

STEP 10	Plug the four (4) threaded holes in the top of the entry section using 5/16" x 1" button head bolt, internal tooth lock washer, and flat washer.

STEP 11	Insert support rung into entry panel.

STEP 12	Raise top of entry panel to 38" above deck surface. Attach entry panel to posts.

Refer to *Versa-Lok®* *Clamp Assembly* Installation.

(Important Note: If a post must "share duty" (i.e., support more than one component), all bar sockets and deck supports must be slid onto clamp halves before attaching the clamp assembly around the post.)

STEP 13	Attach bottom of entry panel to deck.

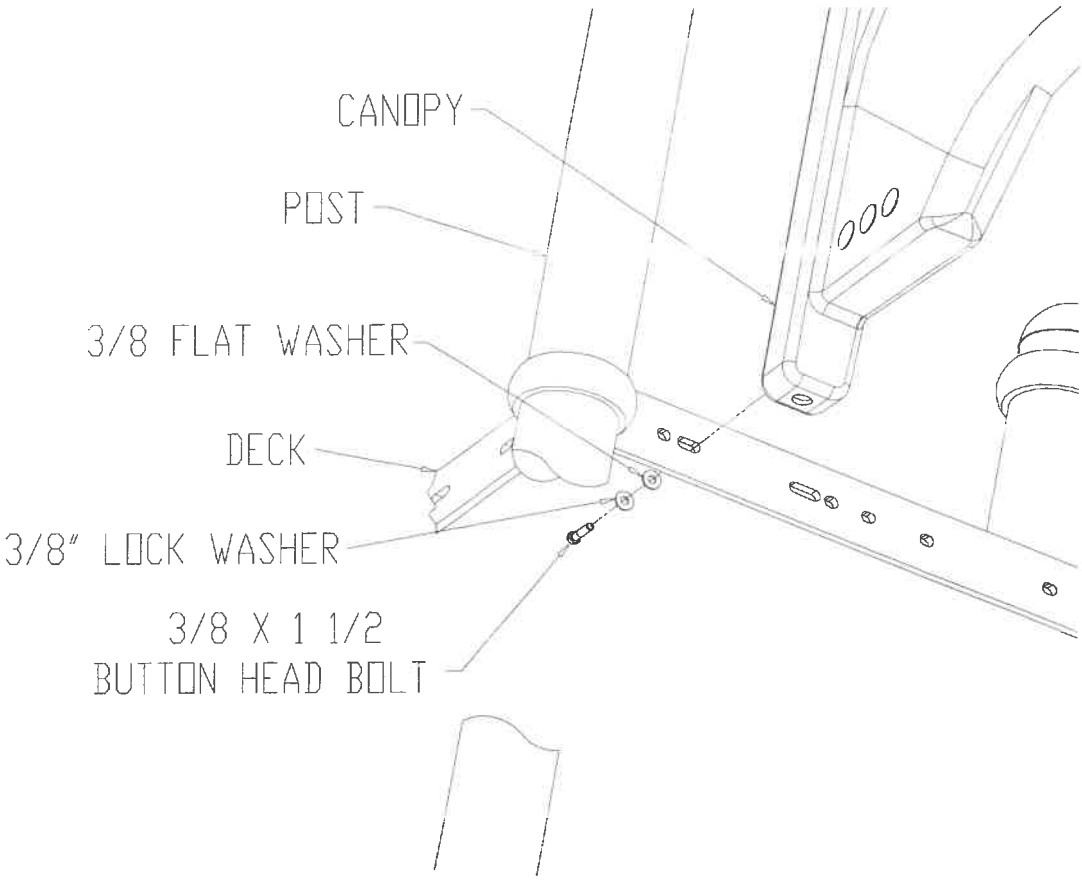

STEP 14	Tighten set screws to secure bar sockets and enclosure braces in place.

STEP 15	Set the height of the slide exit.

Note: For slides from decks of 4 feet in height or less, the height of the exit region should be ***no more than 11 inches*** *from the protective surface. For slides from decks that are over four feet in height, the height of the exit region should be* ***at least 7 inches but not more than 15 inches*** *above the protective surface. Be sure that exit region maintains enough of a slant to insure water drainage.*

FINAL STEP	**Refer to *Final Assembly* Installation.**

INSTALLATION INSTRUCTIONS

MIRACLE
RECREATION EQUIPMENT COMPANY

Model 714-719: Cliff Climber, 3' or 5' deck
Model 714-719-6: Cliff Climber, 6'6" deck
Model 714-721: Canyon Climber, 3' or 5', deck
Model 714-721-6: Canyon Climber, 6'6" deck
Model 714-731: Trap Door Climber, 3' or 5', deck
Model 714-731-6: Trap Door Climber, 6'6" deck
Model 714-808: Climbing Pole, 3', 5', or 6'6" deck
Model 714-908: Spider Climber, 3', 5', or 6'6" deck
Model 714-969: Spiral Climber, 6'6" deck
Model 714-969-5: Spiral Climber, 5' deck
Model 714-976-3: Bumper Ladder, 3' deck
Model 714-976-5: Bumper Ladder, 5' deck
Model 714-976-6: Bumper Ladder, 6'6" deck

March 5, 1998 Rev. E

714-719
714-719-6 (shown)

714-721
714-721-6 (shown)

714-731
714-731-6 (shown)

714-808

714-969 (shown)
714-969-5

714-908

714-976-3 (shown)
714-976-5
714-976-6

TOP VIEW

FOOTING LAYOUT

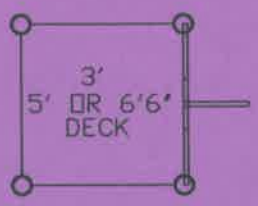

CLIMBING POLE
714-808

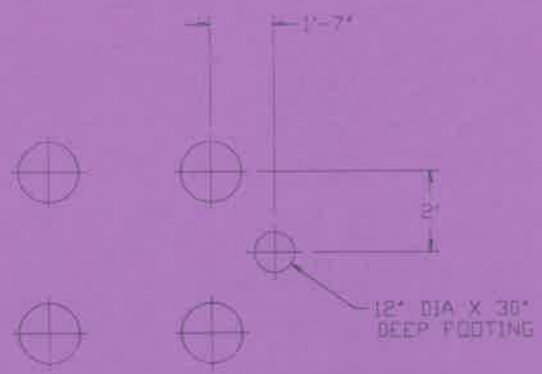

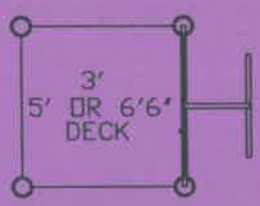

SPIDER CLIMBER
714-908

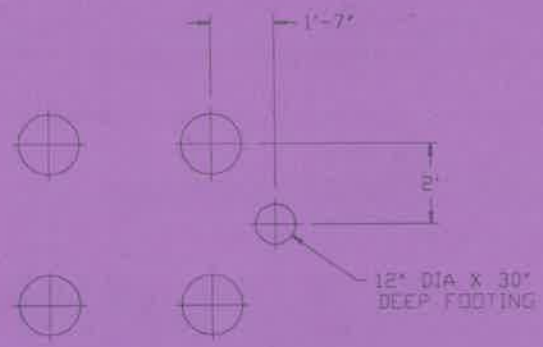

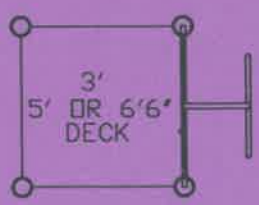

CLIFF CLIMBER
714-719-6
714-719

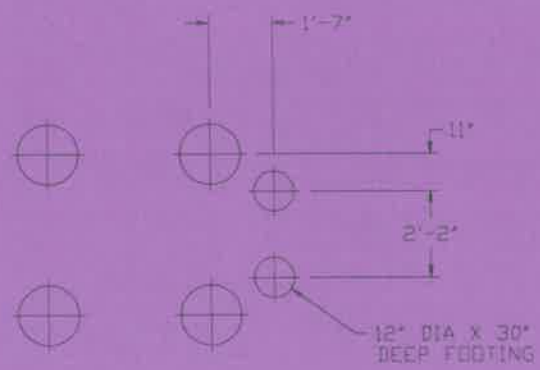

TOP VIEW

FOOTING LAYOUT

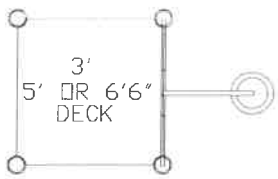

SPRIAL CLIMBER
714-969-5 (SHOWN)
714-969

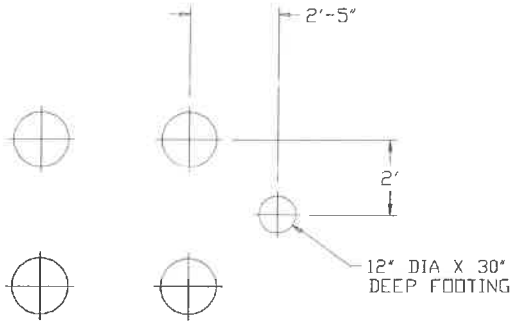

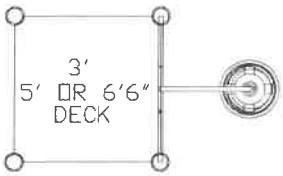

BUMPER LADDER
714-976-3 (SHOWN)
714-976-5
714-976-6

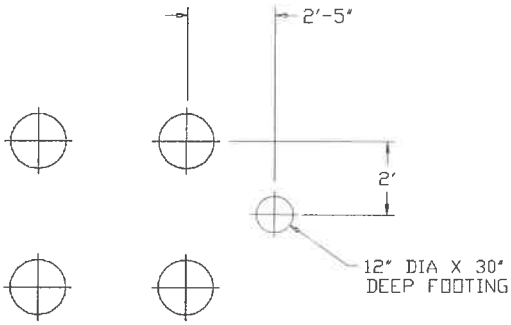

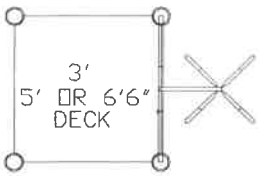

TRAP DOOR
CLIMBER
714-731
714-731-6

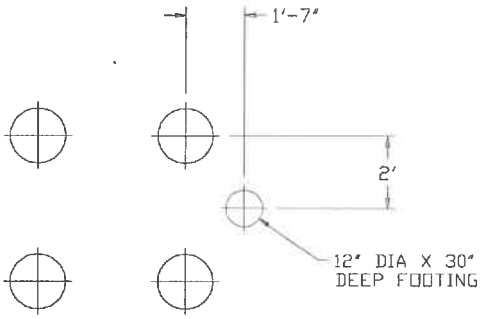

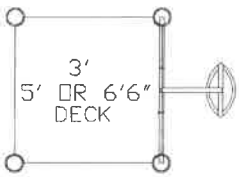

CANYON CLIMBER
714-721
714-721-6

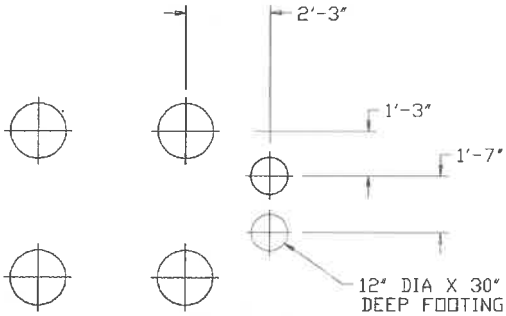

IMPORTANT NOTES

1. Before installing or erecting this equipment, please read and comply with all applicable recommendations in Safety Brochure 100 enclosed. If for some reason this brochure is missing, contact your local Miracle sales representative for a copy.

2. Before starting construction, check with all utility companies for exact locations of underground utilities.

3. When designing areas for footings and the area under and adjacent to all equipment, consideration should be given to soil types and subgrade characteristics. The purchaser and/or installing contractor will be responsible for proper installation and insuring that abnormal and unsafe compaction does not occur in these areas, which are generally recommended to be under and a minimum of 6' out from the edges of all play structures.

4. It is the purchaser's responsibility to maintain these areas properly after installation. It is recommended that compaction tests be made several times per year. When compactions occurs, it is recommended that the area affected be scarified or additional pea gravel, sand, redwood bark or coarse wood shavings be added until the area is soft and resilient.

FOOTINGS

Locate and dig footings 12" in diameter by 30" deep.

Refer to *Footing Details* Installation.

Note: Do not pour concrete for footings until all components in your deck system have been installed per installation instructions, leveled, plumbed and braced in position.

STEP 1	Remove any obstructing PVC from the mating deck holes.

STEP 2	Attach enclosure to posts at 38" above deck.

Refer to *Versa-Lok®* *Clamp Assembly* Installation.

STEP 3	Attach enclosure to deck.

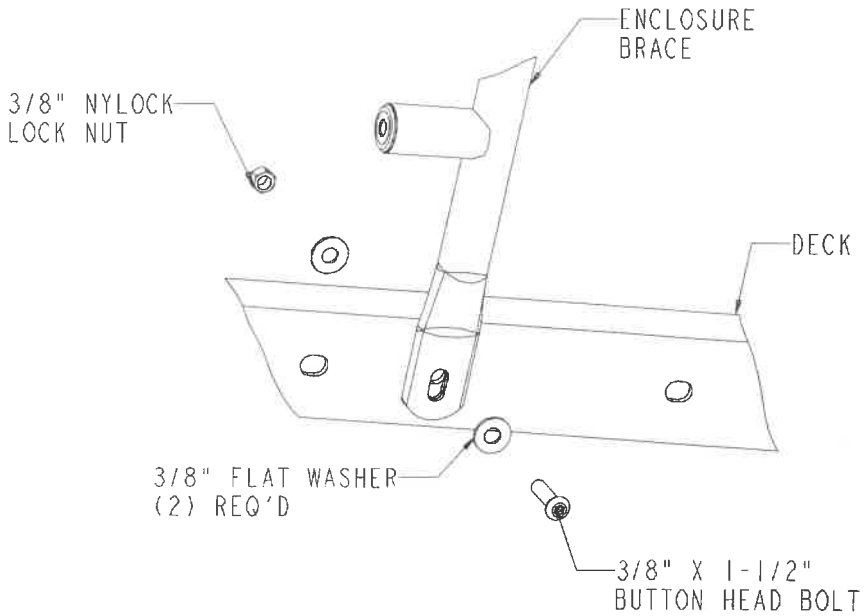

STEP 4	Set climber in footing.

NOTE: ***Some climber assemblies may need to be cut off from the bottom to adjust for specific deck heights. In these instances, measure 90" from the top of the climber and add the distance of the deck height from the finished grade.***

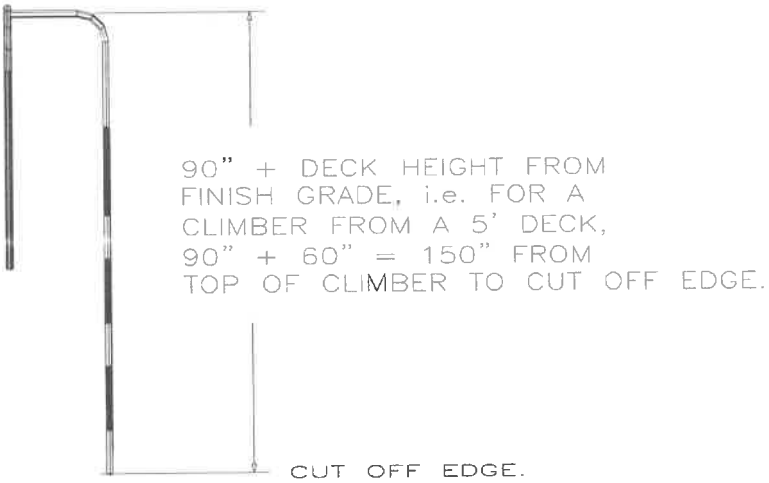

STEP 5	Attach climber assembly to enclosure.

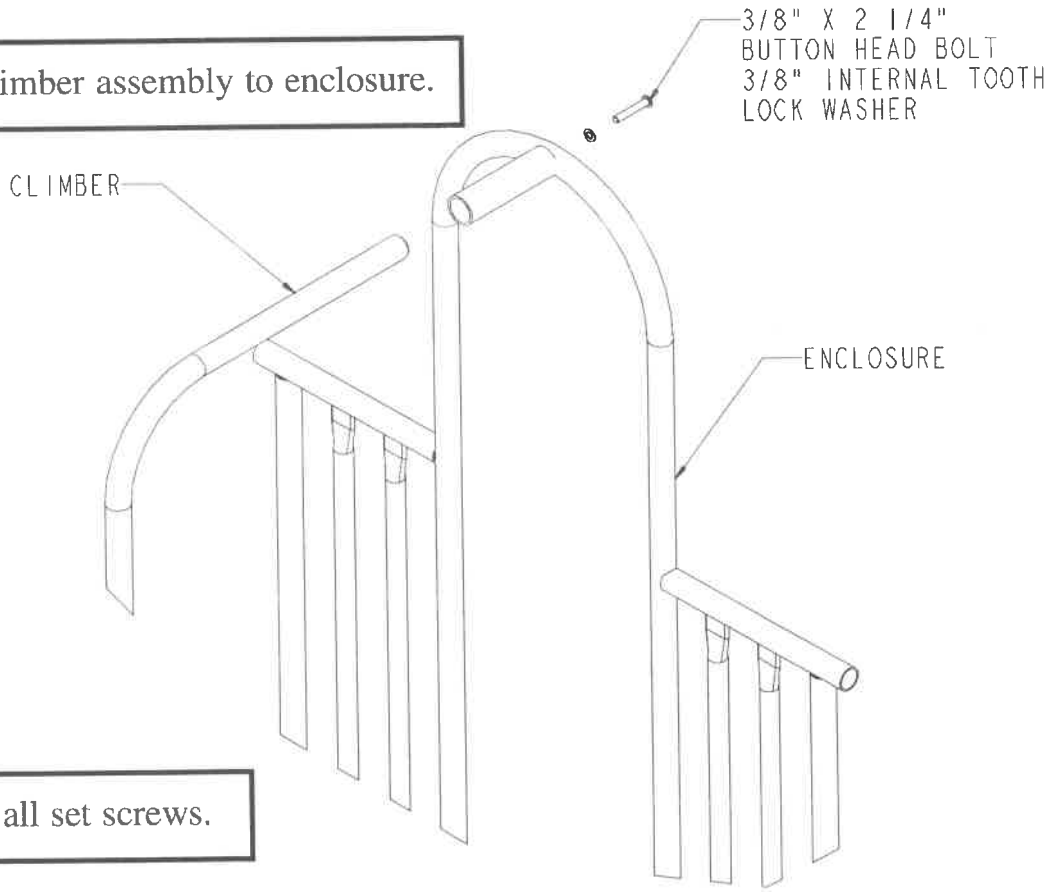

STEP 6	Tighten all set screws.

FINAL STEP	**Refer to *Final Assembly* Installation.**

INSTALLATION INSTRUCTIONS

MIRACLE
RECREATION EQUIPMENT COMPANY

Model 714-885-1: 6'8" Cyclone with steps from a 5' deck
Model 714-885-10: 6'8" Cyclone with ATA steps from a 5' deck
Model 714-885-41: 6'8" Cyclone with steps from a 4' deck
Model 714-886-1: 6'8" Cyclone with a ramp from a 6'6" deck
Model 714-888-1: 12' Cyclone with steps from a 8' deck
Model 714-889-1: 12' Cyclone with steps from a 6'6" deck
Model 714-962-1: 8' Cyclone with steps from a 5' deck
Model 714-962-61: 8'2" Cyclone with steps from a 6'6" deck

May 21, 1998 (Rev. G)

6'-8" HIGH CYCLONE SLIDE
OFF 5'-0" HIGH DECK
MODEL 714-885-1 (shown)
MODEL 714-885-10

6'-8" HIGH CYCLONE SLIDE
OFF 4'-0" HIGH DECK
MODEL 714-885-41

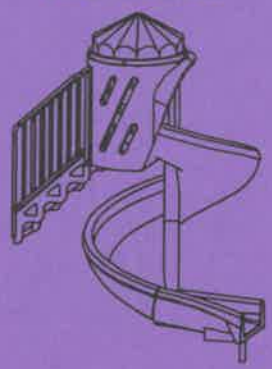

6'-8" HIGH CYCLONE SLIDE
OFF 6'-6" DECK
MODEL 714-886-1

12' HIGH CYCLONE
OFF 8' HIGH DECK
MODEL 714-888-1

12' HIGH CYCLONE
OFF 6'-6" HIGH DECK
MODEL 714-889-1

8'-0" HIGH CYCLONE SLIDE
OFF 5'-0" HIGH DECK
MODEL 714-962-1

8'-2" HIGH CYCLONE SLIDE
OFF 6'-6" HIGH DECK
MODEL 714-962-61

TOP VIEW

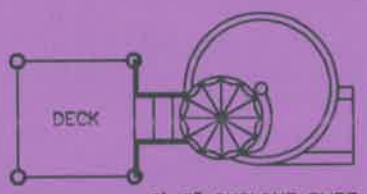

6'-8" CYCLONE SLIDE
714-885-1
AND
714-886-1

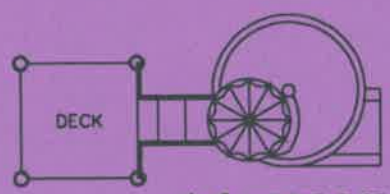

6'-8" CYCLONE SLIDE
714-885-10

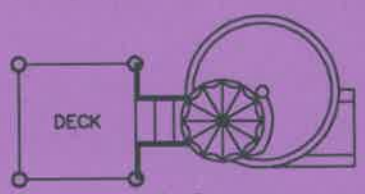

6'-8" CYCLONE SLIDE
714-885-41

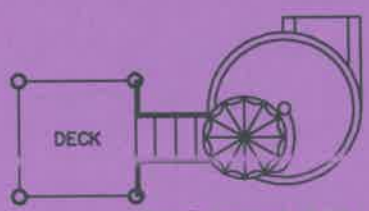

8'-0" CYCLONE SLIDE
714-962-1

FOOTING LAYOUT

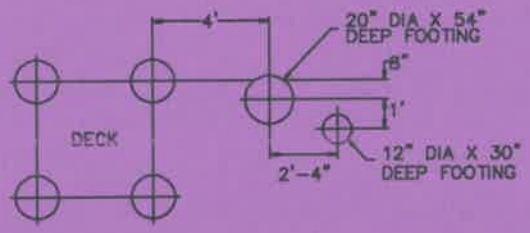

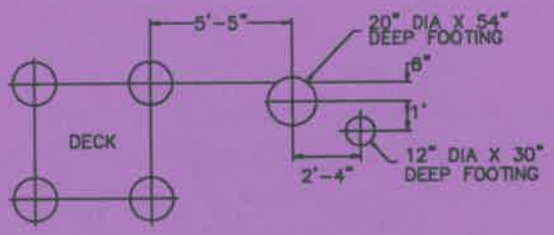

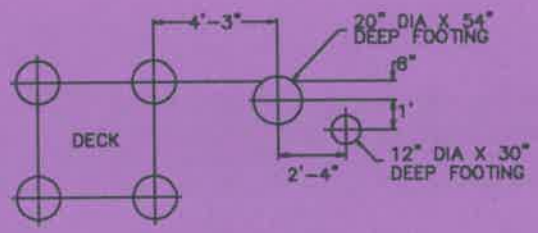

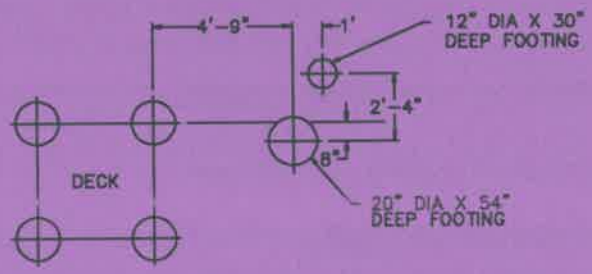

TOP VIEW

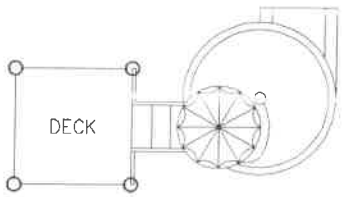

8'-2" CYCLONE SLIDE
714-962-61

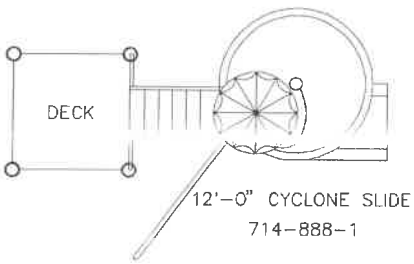

12'-0" CYCLONE SLIDE
714-888-1

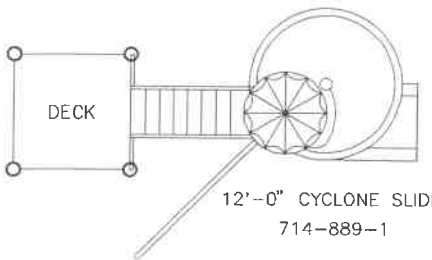

12'-0" CYCLONE SLIDE
714-889-1

FOOTING LAYOUT

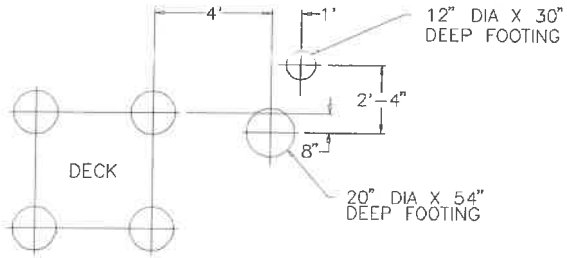

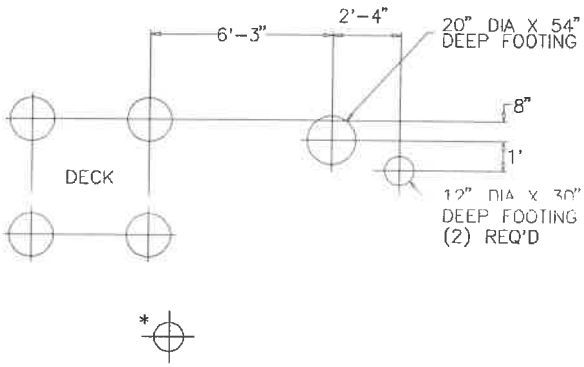

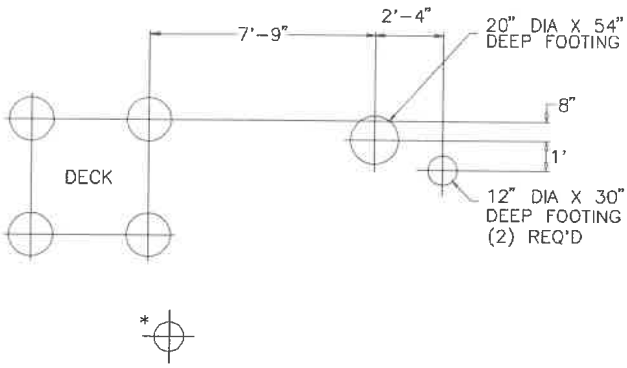

* LOCATE ON SITE

PARTS IDENTIFICATION

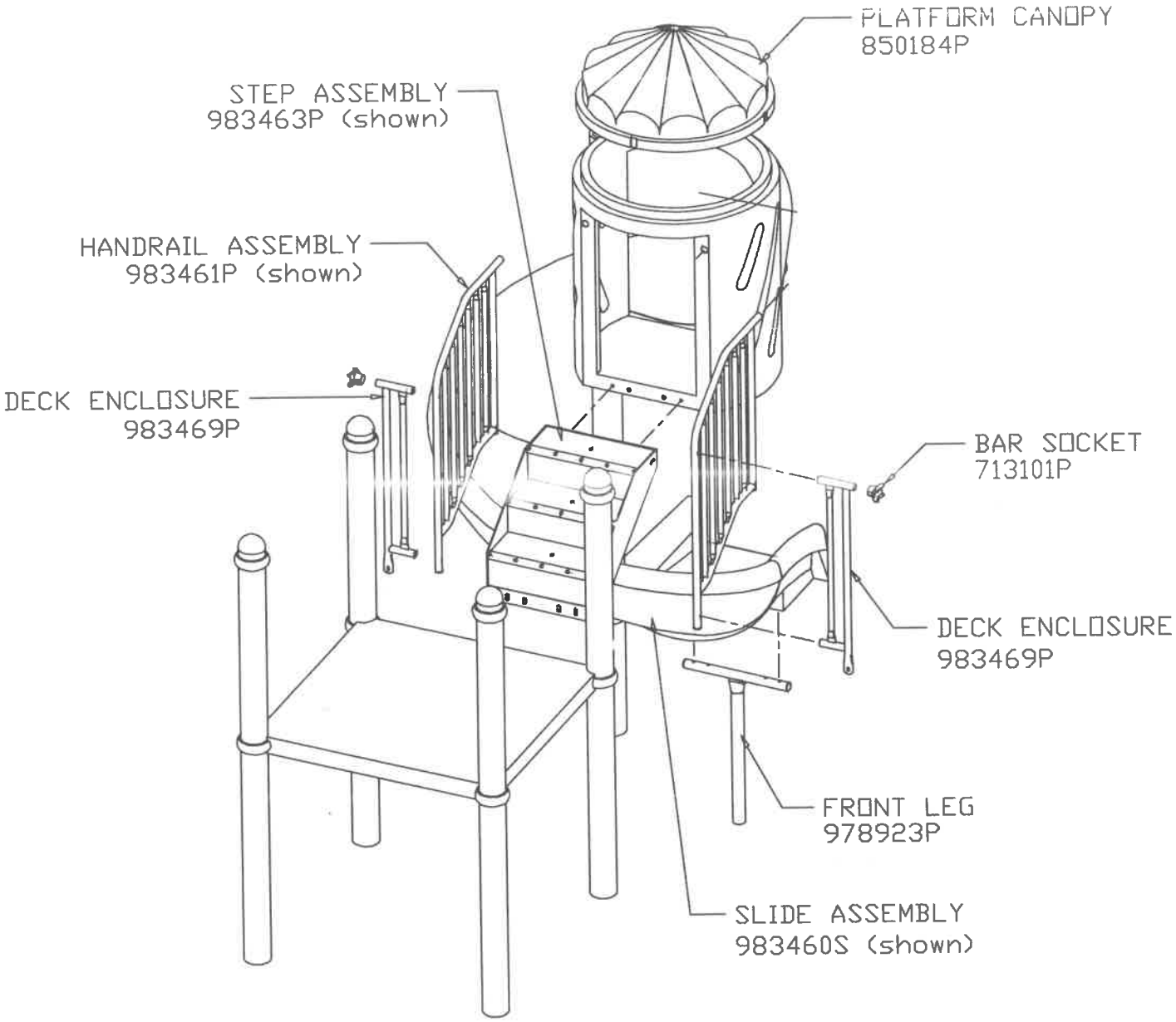

IMPORTANT NOTES

1. Before installing or erecting this equipment, please read and comply with all applicable recommendations in Safety Brochure 100 enclosed. If for some reason this brochure is missing, contact your local Miracle sales representative for a copy.

2. Before starting conctruction, check with all utility companies for exact locations of underground utilities.

3. When designing areas for footings and the area under and adjacent to all equipment, consideration should be given to soil types and subgrade characteristics. The purchaser and/or installing contractor will be responsible for proper installation and insuring that abnormal and unsafe compaction does not occur in these areas, which are generally recommended to be under and a minimum of 6' out from the edges of all play structures.

4. It is the purchaser's responsibility to maintain these areas properly after installation. It is recommended that compaction tests be made several times per year. When compactions occurs, it is recommended that the area affected be scarified or additional pea gravel, sand, redwood bark or coarse wood shavings be added until the area is soft and resilient.

FOOTINGS

1. Dig the 20" x 54" center pole and 12" x 30" front leg footings.

Refer to *Footing Details* Installation.

Note: ***Do not pour concrete for component activity footings until all components in your deck system have been installed per installation instructions, leveled, plumbed and braced in position.***

STEP 1	Attach enclosure to posts.

Refer to *Versa-Lok®* *Clamp Assembly* Installation.

STEP 2	Attach enclosure to deck.

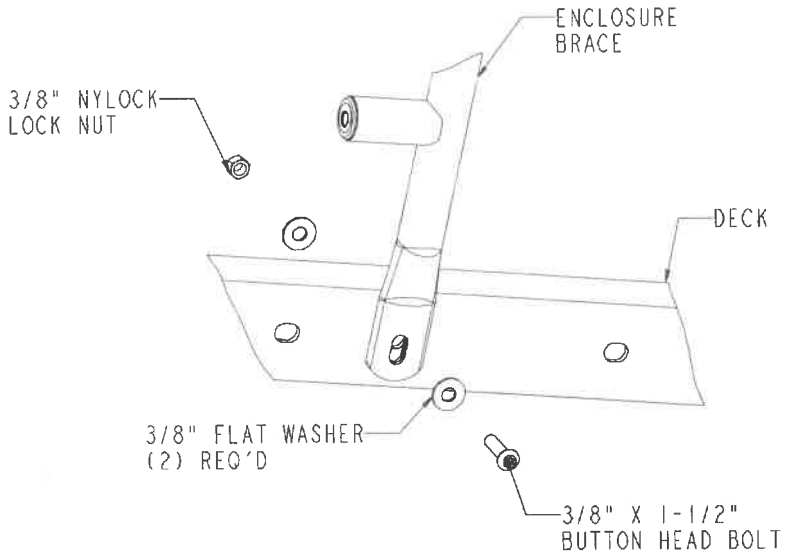

STEP 3	Tighten bar socket set screws to fix enclosure and bar socket in place.

STEP 4	Bolt the step enclosure to the deck enclosure.

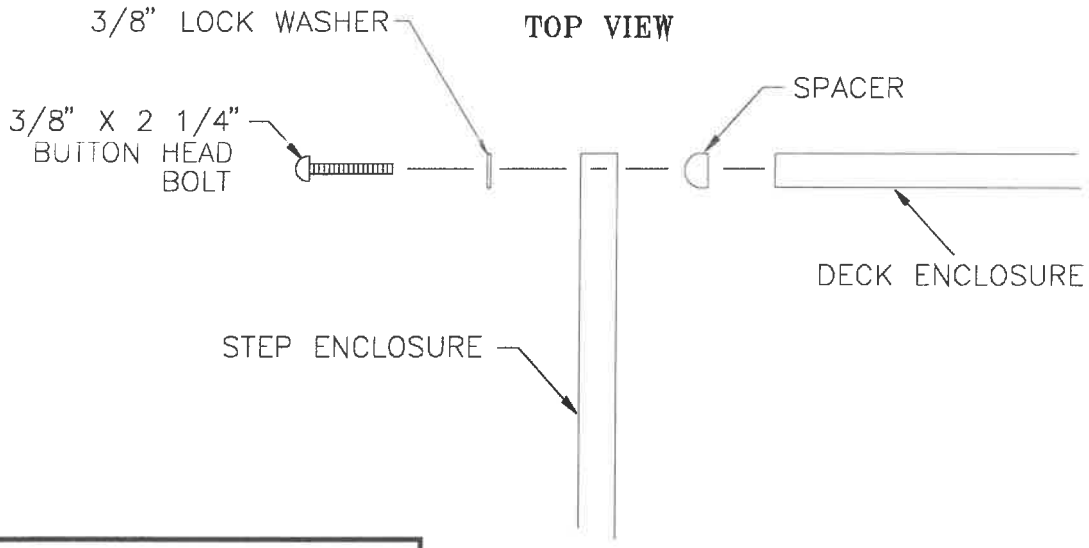

STEP 5	Bolt the step to the deck.

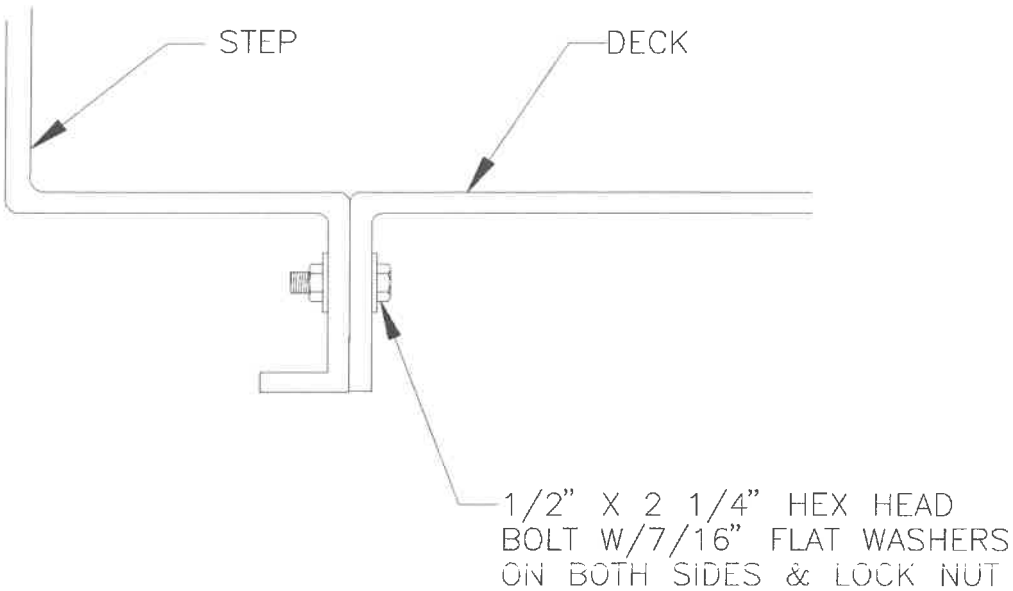

STEP 6	Adjust the height and position of the step to line up the holes on top of the step enclosure.

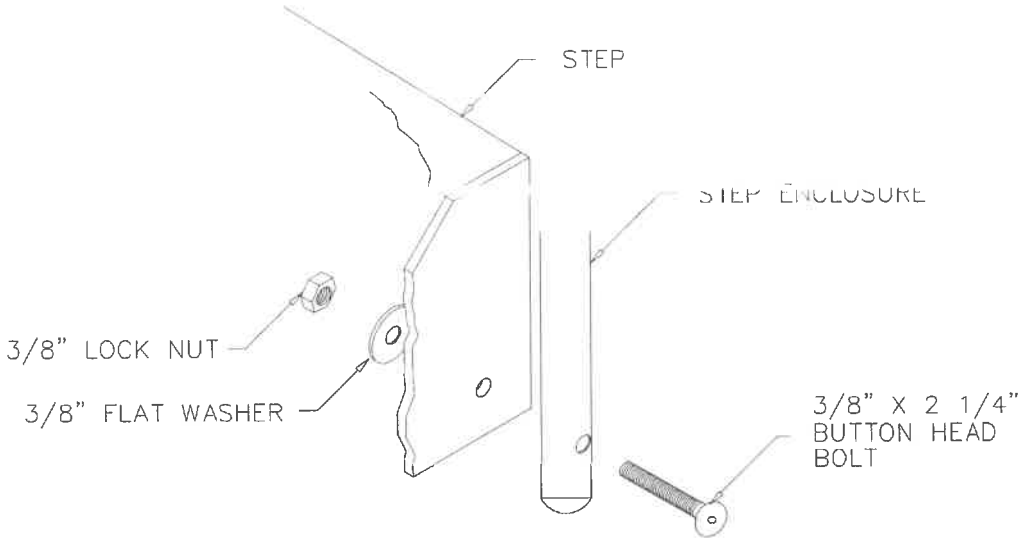

STEP 7	Bolt top end of step enclosure to step.

STEP 8	Attach front leg to slide.

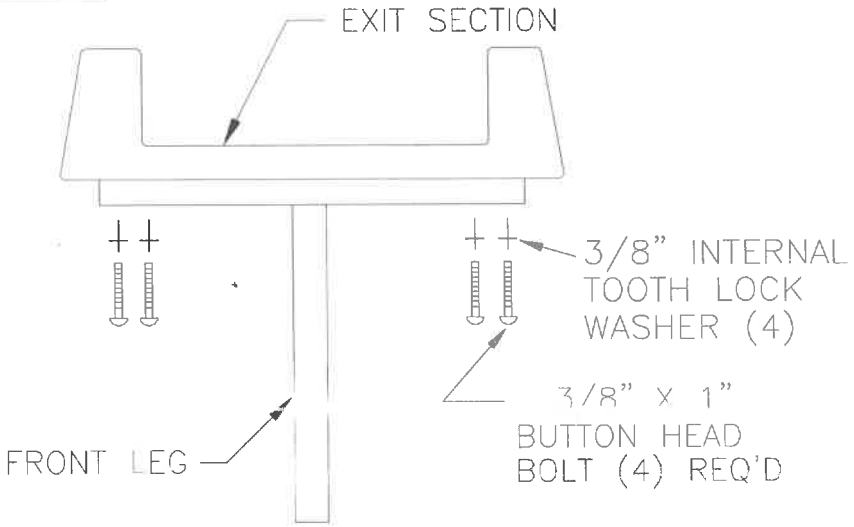

STEP 9	Using a fork lift, lift entire assembly and set the center pole in the 20" diameter footing.

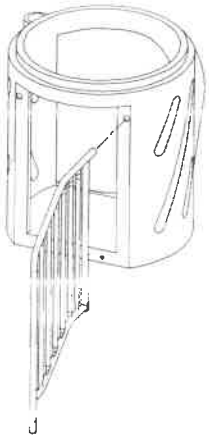

STEP 10	Insert handrails into slide.

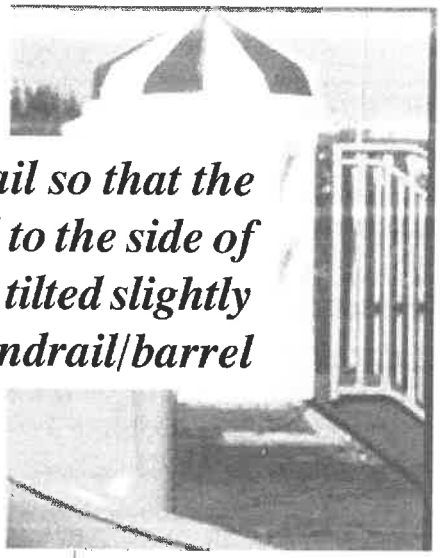

Important note: Position slide and handrail so that the end upright (next to slide barrel) is parallel to the side of the barrel. Even if slide or handrail must be tilted slightly off vertical, priority must be given to handrail/barrel spacing.

STEP 11	Bolt the stair (or ramp) assembly to the platform.

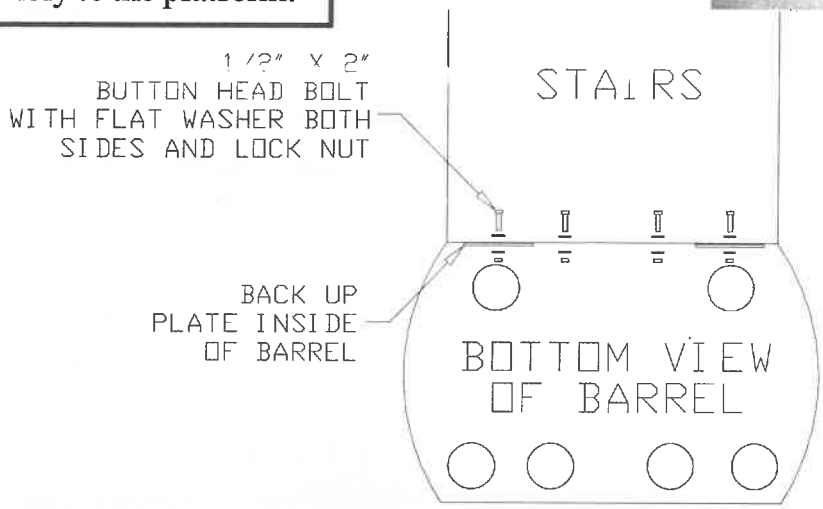

STEP 12	Set the height of the slide exit from the top of the protective surface.

Note: For slides from decks of 4 feet in height or less, the height of the exit region should be ***no more than 11 inches*** *from the protective surface. For slides from decks that are over four feet in height, the height of the exit region should be* ***at least 7 inches but not more than 15 inches*** *above the protective surface. Be sure that exit region maintains enough of a slant to insure water drainage.*

For models
714-888 & 714-889-1:
refer to steps 12 through 16 following:

For all other models, proceed to step 17:

STEP 13	Position brace to step to determine footing location and dig footing.
STEP 14	Using brace hole as a guide, drill a 9/16" hole in step.
STEP 15	Attach diagonal brace to step.
STEP 16	Tighten all fasteners securely.

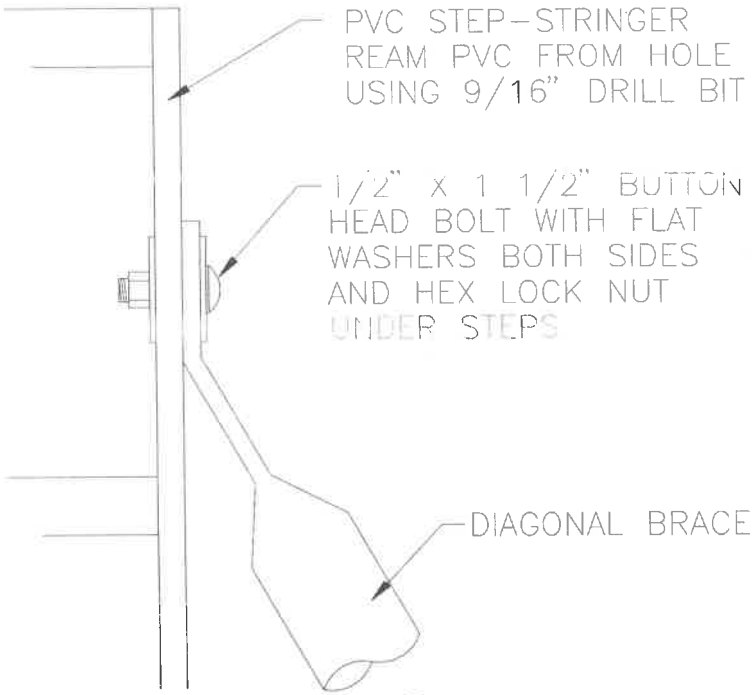

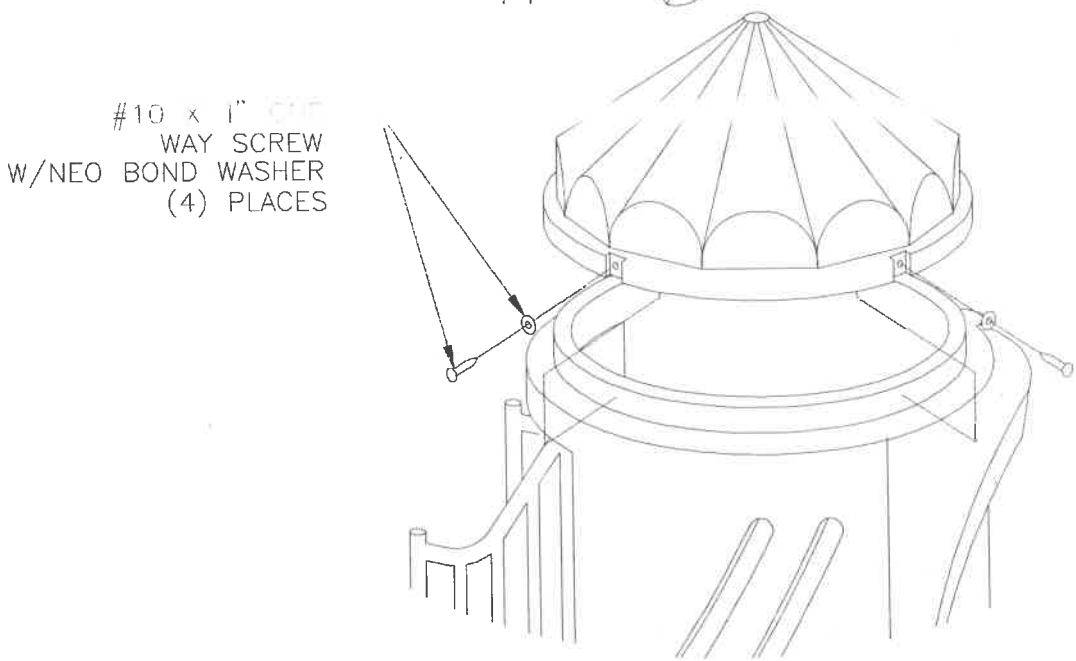

STEP 17	Position platform canopy on the platform barrel. Using an electric screw driver, attach canopy to barrel.

FINAL STEP	**Refer to *Final Assembly* Installation.**

INSTALLATION INSTRUCTIONS

MIRACLE
RECREATION EQUIPMENT COMPANY

Handrails with Spokes			Open Handrails	
714-810	-	ATA Stair - 1' rise		
714-882	-	STD Stair - 3' to 8' Deck		
714-896	-	STD Stair - 3' to 6'6" Deck	-	714-896-5
714-897	-	STD Stair - 5' to 6'6" Deck	-	714-897-5
714-959	-	ATA Stair - 3' to 5' Deck	-	714-959-5
714-990	-	STD Stair - 3' to 5' Deck	-	714-990-5
714-993	-	ATA Stair - 5' to 6'6" Deck	-	714-993-5

August 14, 1997 Rev. D

714-896 (shown)
714-882

714-896-5

714-897 (shown)
714-810

714-897-5

714-959

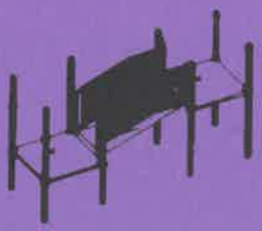

714-959-5

714-990

714-990-5

714-993

714-993-5

TOP VIEW

MIRATHERM
STAIRS
714-896 & 714-896-5

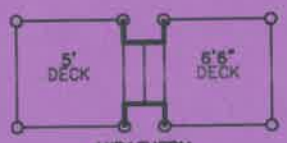

MIRATHERM
STAIRS
714-897 & 714897-5 (shown)
714-810

ATA MIRATHERM
STAIRS
714-959 & 714-959-5

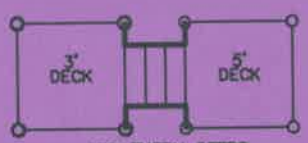

MIRATHERM STEPS
3' TO 5'
714-990 & 714-990-5

MIRATHERM STEPS
ATA 5' TO 6'6" (SHOWN)
714-993 & 714-993-5
STD 3' TO 8'
714-882

FOOTING LAYOUT

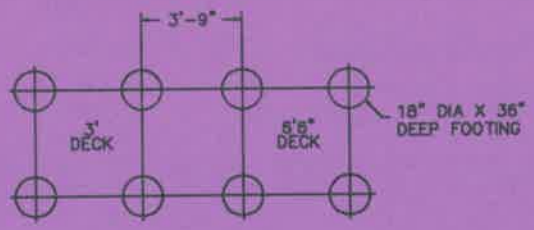

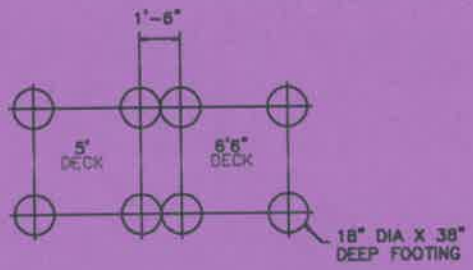

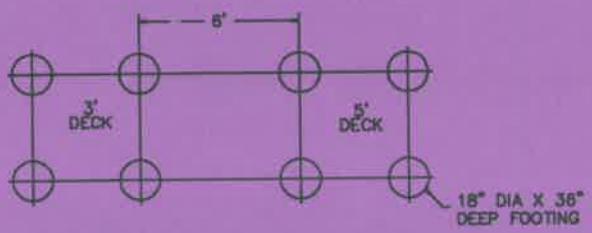

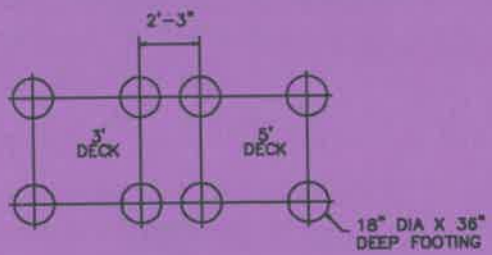

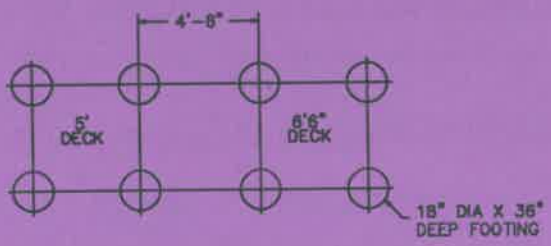

IMPORTANT NOTES

1. Before installing or erecting this equipment, please read and comply with all applicable recommendations in Safety Brochure 100 enclosed. If for some reason this brochure is missing, contact your local Miracle sales representative for a copy.

2. Before starting construction, check with all utility companies for exact locations of underground utilities.

3. When designing areas for footings and the area under and adjacent to all equipment, consideration should be given to soil types and subgrade characteristics. The purchaser and/or installing contractor will be responsible for proper installation and insuring that abnormal and unsafe compaction does not occur in these areas, which are generally recommended to be under and a minimum of 6' out from the edges of all play structures.

4. It is the purchaser's responsibility to maintain these areas properly after installation. It is recommended that compaction tests be made several times per year. When compactions occurs, it is recommended that the area affected be scarified or additional pea gravel, sand, redwood bark or coarse wood shavings be added until the area is soft and resilient.

FOOTINGS

No additional concrete is required for these models. Refer to deck footing instructions for information regarding deck post footings.

NOTE:Do not pour concrete for component activity footings until all components in your deck system have been installed per installation instructions, leveled, plumbed and braced in position. (Refer to Deck *Installation Instructions.*)

STEP 1	Remove PVC from the deck mating holes.

STEP 2	Bolt steps to deck.

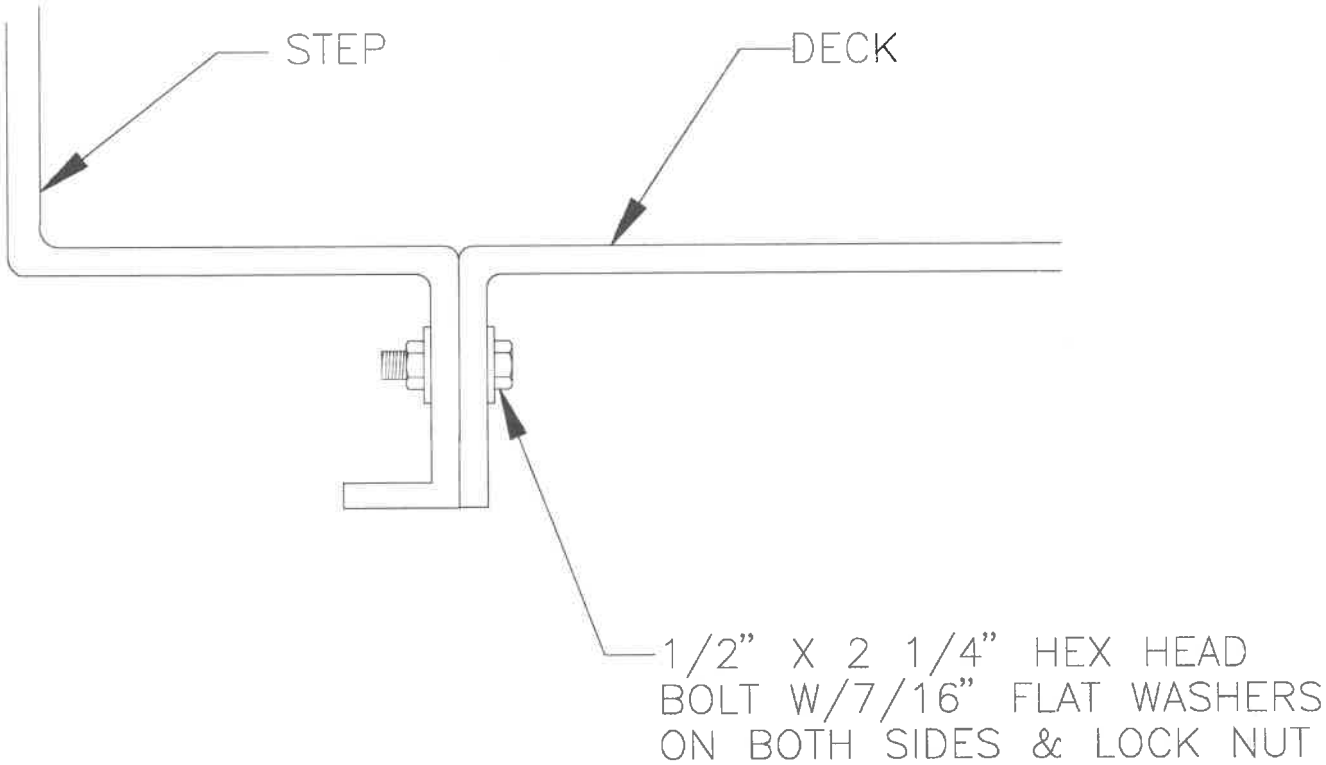

STEP 3	Remove PVC from the deck mating holes for enclosure attachment.

STEP 4	Position enclosures to posts with clamps at 38" above deck surface.

STEP 5	Bolt bottom of enclosures to deck.

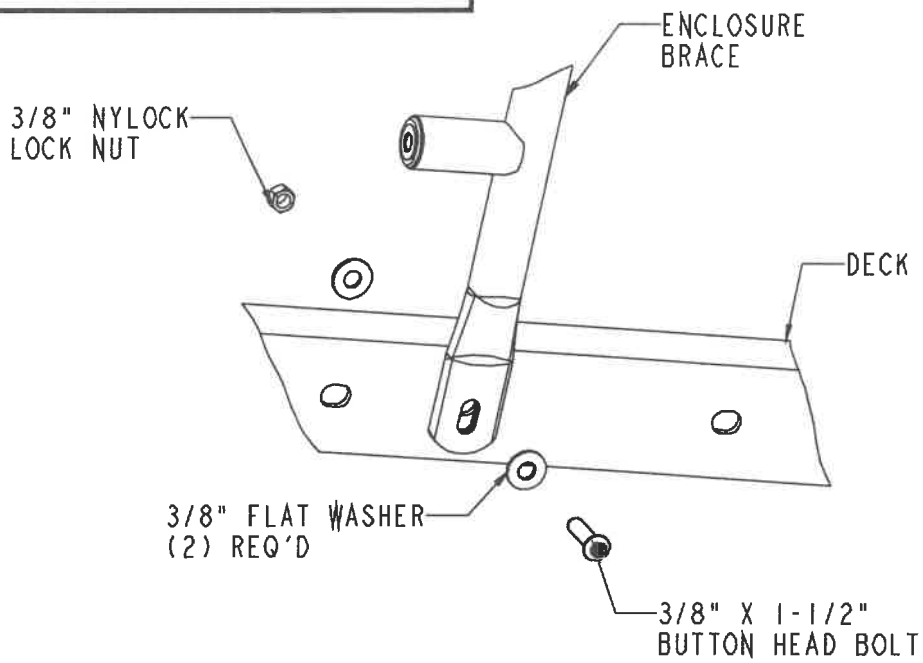

STEP 6	Attach enclosures to posts with clamps.

REFER TO *VERSA-LOK®* *CLAMP ASSEMBLY* INSTALLATION.

STEP 7	Attach deck enclosures to step side handrails.

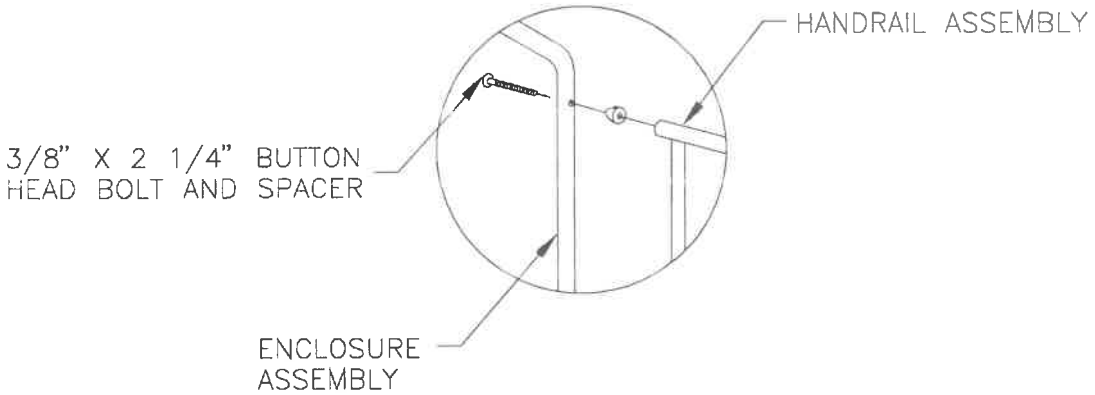

STEP 8	Attach step enclosures to step.

STEP 9	Remove pvc from holes in step.

STEP 10	Attach the bottom of the higher end of each handrail to the side of the step. Repeat for lower end of each handrail.

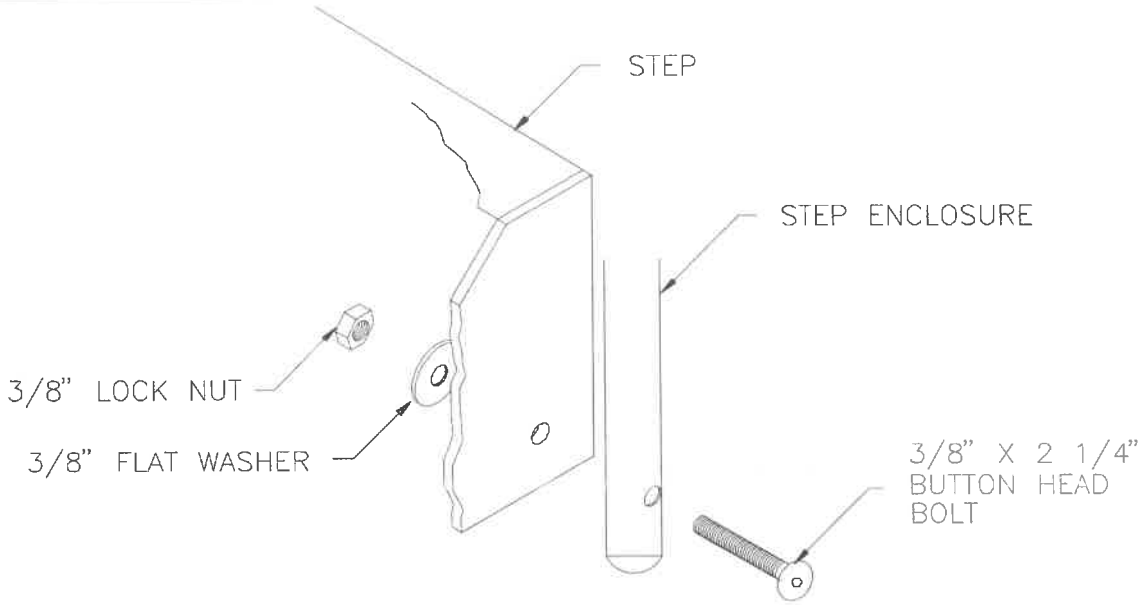

FINAL STEP	**REFER TO *FINAL ASSEMBLY* INSTALLATION.**

MIRACLE
RECREATION EQUIPMENT COMPANY

INSTALLATION INSTRUCTIONS

Model 714-907
Twister Slide

April 2, 1998 Rev. D

714-907

TOP VIEW

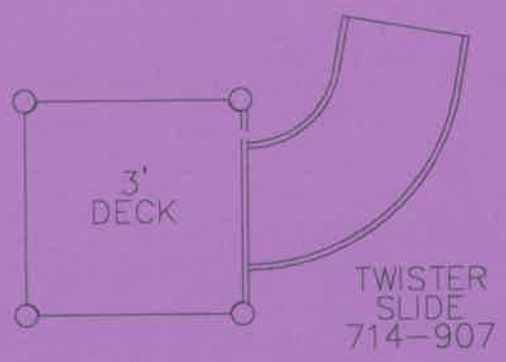

FOOTING LAYOUT

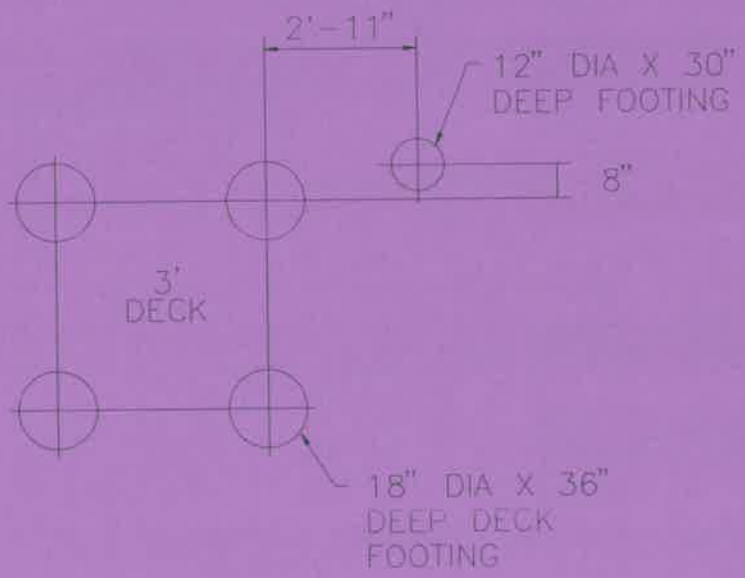

IMPORTANT NOTES

1. Before installing or erecting this equipment, please read and comply with all applicable recommendations in Safety Brochure 100 enclosed. If for some reason this brochure is missing, contact your local Miracle sales representative for a copy.

2. Before starting construction, check with all utility companies for exact locations of underground utilities.

3. When designing areas for footings and the area under and adjacent to all equipment, consideration should be given to soil types and subgrade characteristics. The purchaser and/or installing contractor will be responsible for proper installation and insuring that abnormal and unsafe compaction does not occur in these areas, which are generally recommended to be under and a minimum of 6' out from the edges of all play structures.

4. It is the purchaser's responsibility to maintain these areas properly after installation. It is recommended that compaction tests be made several times per year. When compaction occurs, it is recommended that the area affected be scarified or additional pea gravel, sand, redwood bark or coarse wood chips be added until the area is soft and resilient.

FOOTINGS

Dig the footing for the front leg.

Refer to *Footing Details* Installation.

Note: ***Do not pour concrete for footings until all components in your deck system have been installed per installation instructions, leveled, plumbed and braced in position.***

STEP 1	Bolt front leg to bottom of slide exit.

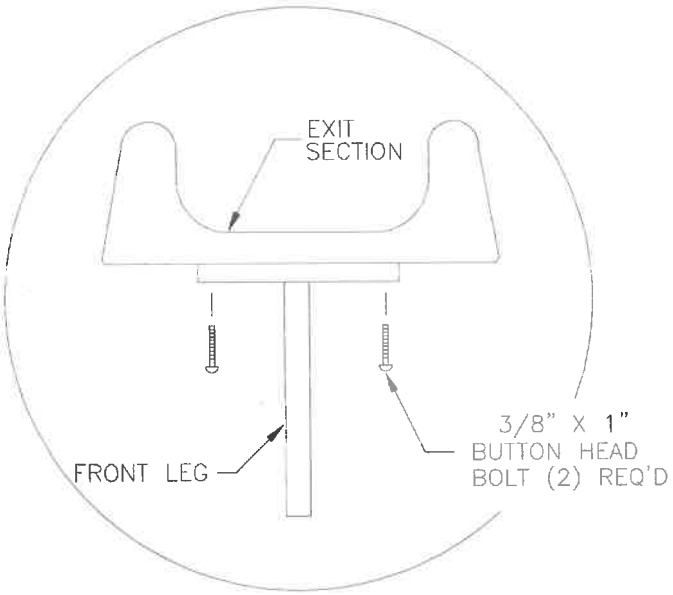

STEP 2	Remove obstructing PVC from (2) sets of holes, on the slide side of the deck, located 13-3/4" and 22" apart and centered on the deck.

STEP 3	Place front leg in footing, positioning slide against the deck. Bolt the slide to these holes.

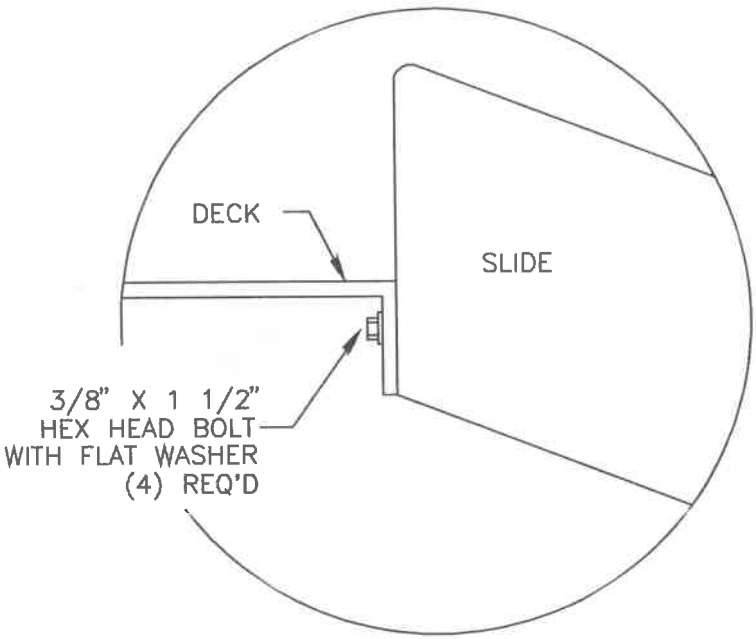

STEP 4	Insert inside enclosure uprights into holes in slide siderails and position handhold bar at 38" above the edge of the deck.

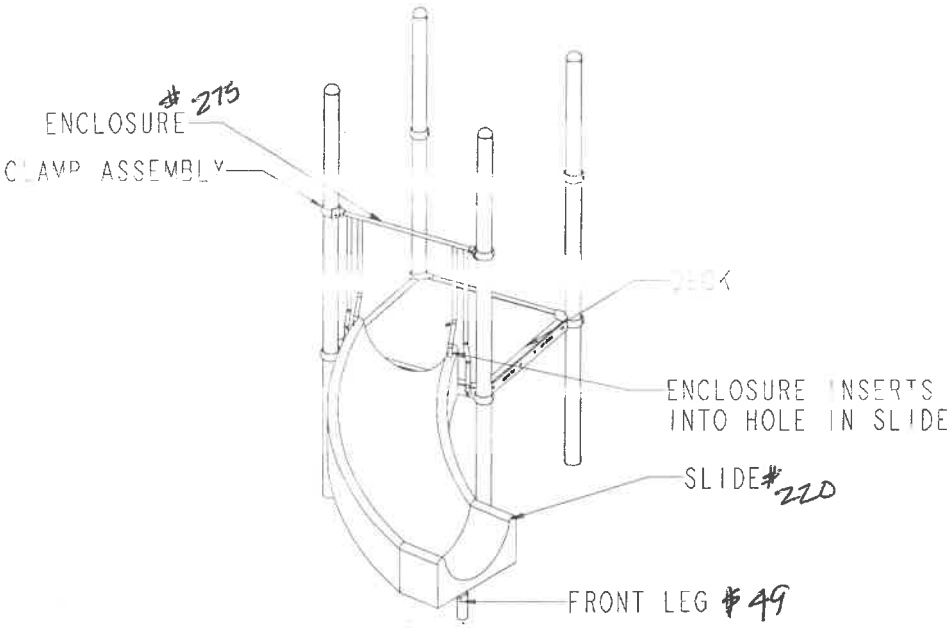

STEP 5	Remove obstructing PVC from deck mating holes and attach bottom of enclosure to deck.

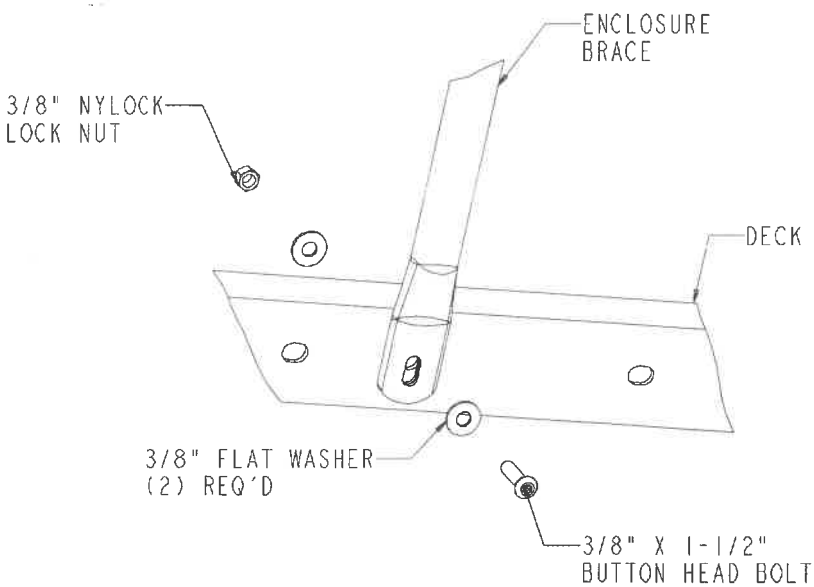

STEP 6	Attach enclosure to posts with clamps.

Refer to *Versa-Lok®* *Clamp Assembly* Installation.

STEP7	Set the height of the slide.

Note: *Set the height of the slide exit from the top of the protective surface. For slides from decks of 4 feet in height or less, the height of the exit region should be no more than 11 inches from the protective surface. For slides from decks that are over four feet in height, the height of the exit region should be at least 7 inches but not more than 15 inches above the protective surface. Be sure that exit region maintains enough of a slant to insure water drainage.*

FINAL STEP	**Refer to *Final Assembly* Installation.**

INSTALLATION INSTRUCTIONS

Curved Loop Climbers

Model 714-724: Uphill Climber, 5' or 6'6" Deck
Model 714-943: Curved Loop Climber from a 5' or 6'6" Deck
Model 714-968: Curved Loop Climber from a 3' Deck
Model 714-968-4: Curved Loop Climber from a 4' Deck

December 5, 1997 Rev. 4

714-968 (shown)
714-968-4

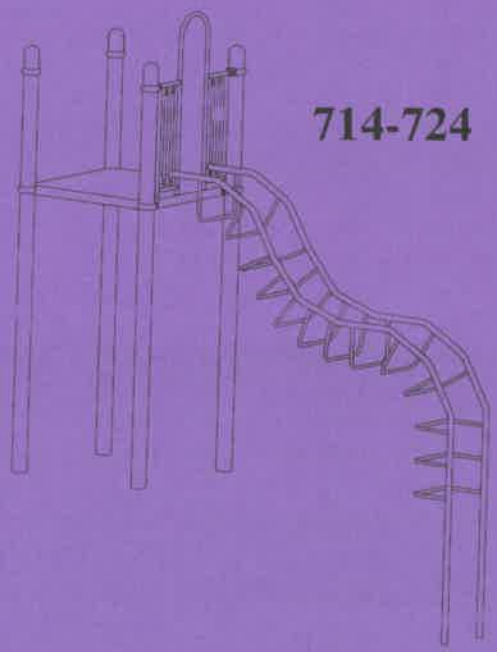

714-724

714-943

TOP VIEW

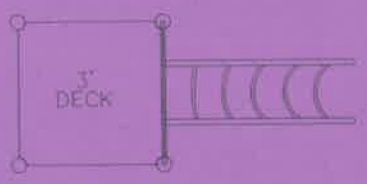

LOOP
CLIMBER
714-968

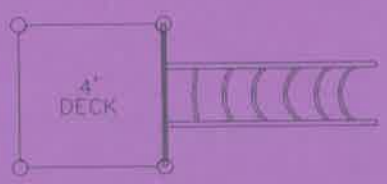

LOOP
CLIMBER
714-968-4

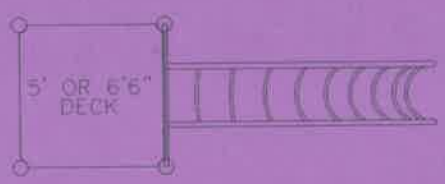

LOOP
CLIMBER
714-943

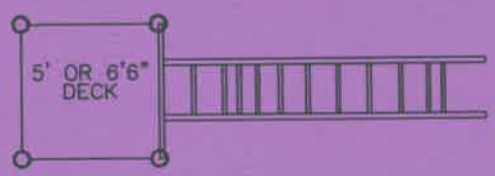

UPHILL
CLIMBER
714-724

FOOTING LAYOUT

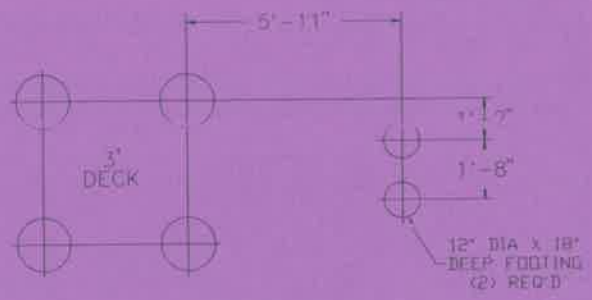

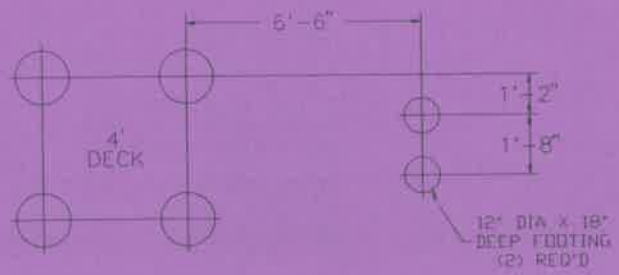

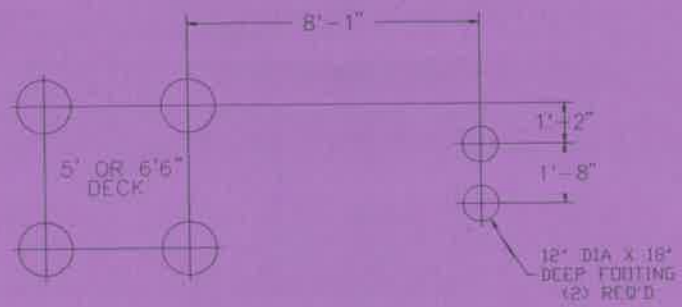

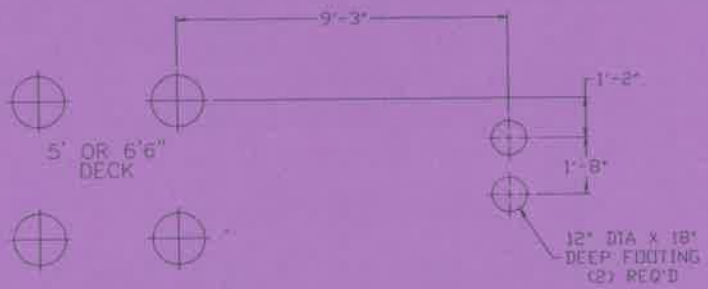

IMPORTANT NOTES

1. Before installing or erecting this equipment, please read and comply with all applicable recommendations in Safety Brochure 100 enclosed. If for some reason this brochure is missing, contact your local Miracle sales representative for a copy.

2. Before starting construction, check with all utility companies for exact locations of underground utilities.

3. When designing areas for footings and the area under and adjacent to all equipment, consideration should be given to soil types and subgrade characteristics. The purchaser and/or installing contractor will be responsible for proper installation and insuring that abnormal and unsafe compaction does not occur in these areas, which are generally recommended to be under and a minimum of 6' out from the edges of all play structures.

4. It is the purchaser's responsibility to maintain these areas properly after installation. It is recommended that compaction tests be made several times per year. When compaction occurs, it is recommended that the area affected be scarified or additional pea gravel, sand, redwood bark or coarse wood chips be added until the area is soft and resilient.

FOOTINGS

Dig the footings.

Refer to *Footing Details* Installation.

Note: ***Do not pour concrete for footings until all components in your deck system have been installed per installation instructions, leveled, plumbed and br. ·ed in position.***

STEP 1	Raise the top of the enclosure handrails to 38" above the edge of the deck and attach to posts using the clamps.

Refer to *Versa-Lok®* *Clamp Assembly* Installation.

STEP 2	Attach the bottom of the enclosure to the deck.

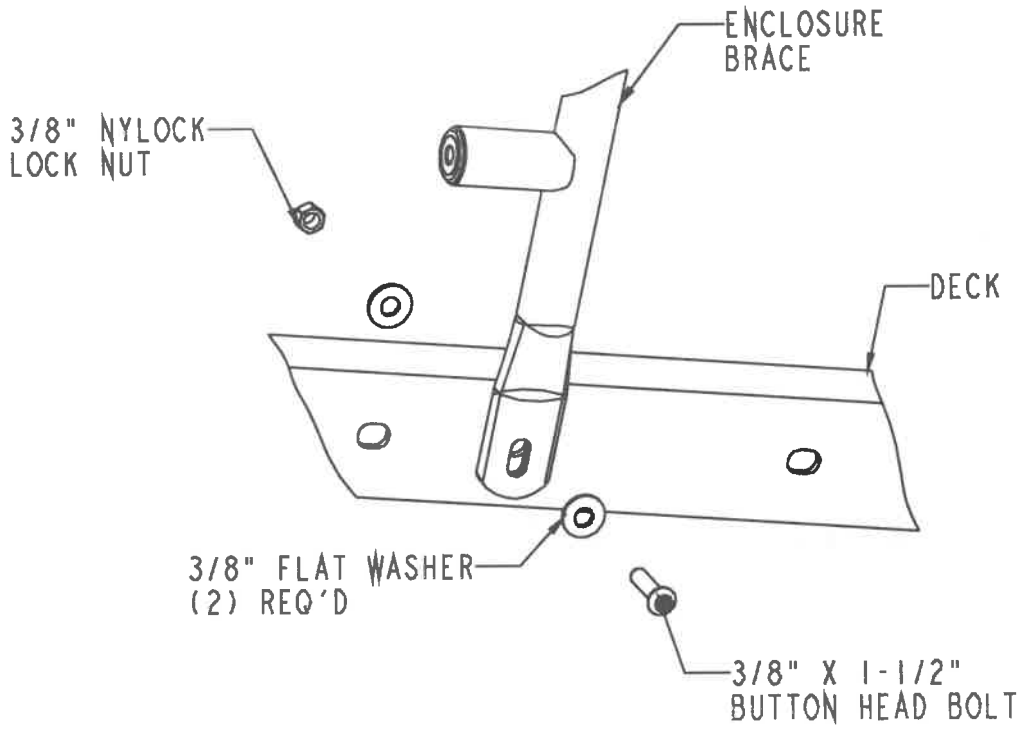

STEP 3	Set the end of the climber in the footing holes.

STEP 4	Attach remaining end of the climber to the enclosure uprights. The climber siderails have nuts in the ends to accept the bolts. Be sure that there is at least 9 inches of clearance between the first loop and the edge of the deck.

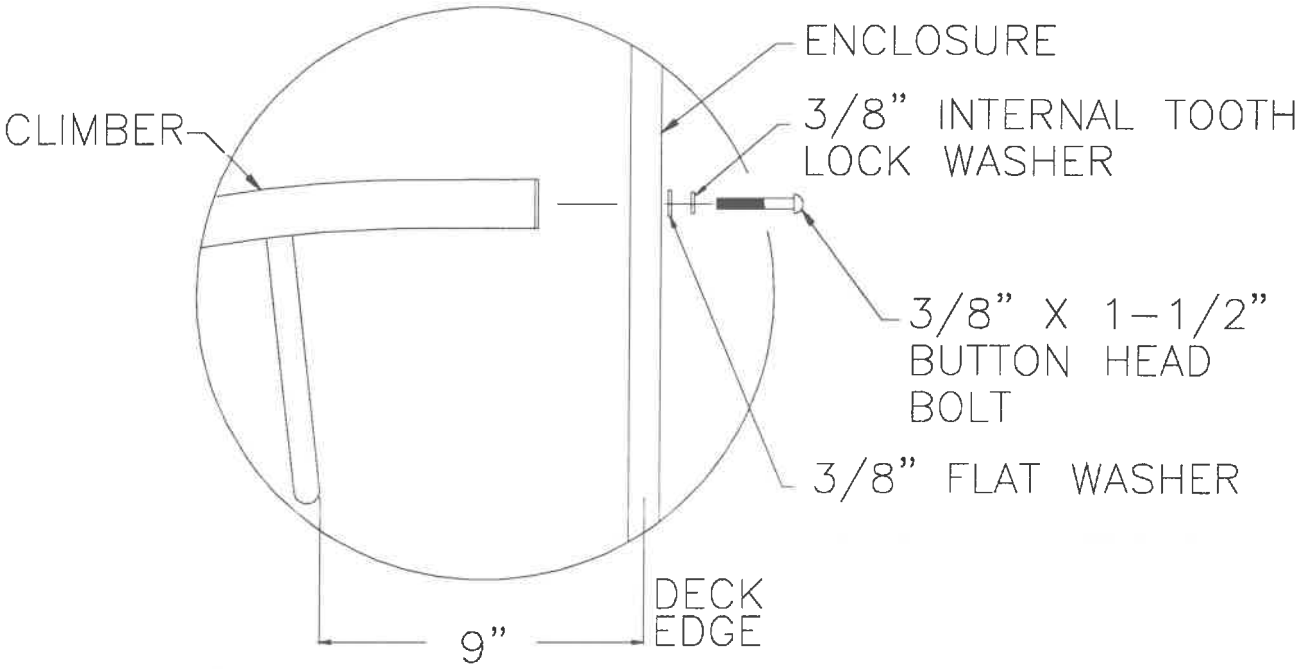

FINAL STEP	**Refer to *Final Assembly* Installation.**

MIRACLE
RECREATION EQUIPMENT COMPANY

INSTALLATION INSTRUCTIONS

Model 714-965: Transfer Point with Single Step (3' Deck)
Model 714-965-4: Transfer Point with Single Step (4' Deck)
Model 714-965-5: Transfer Point with Single Step (5' Deck)

August 13, 1997 Rev. H

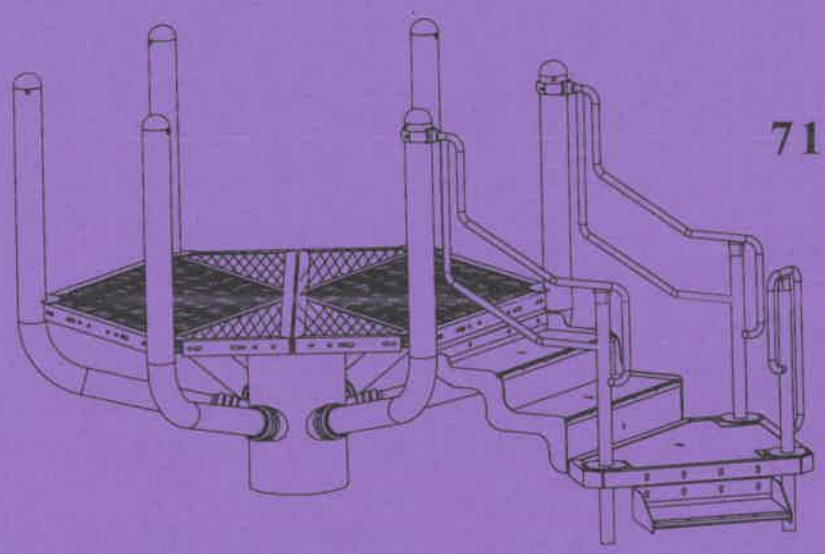

714-965

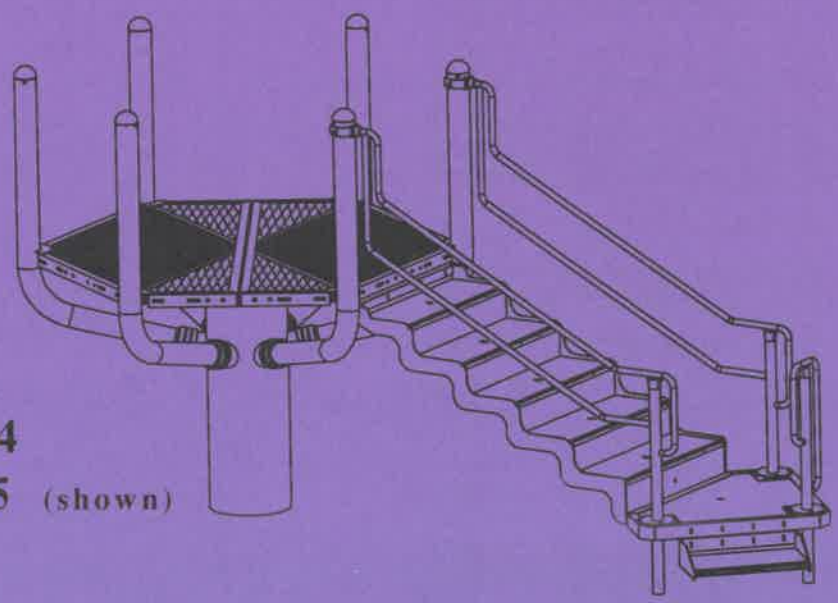

714-965-4
714-965-5 (shown)

FOOTING LAYOUTS

MODEL 714-965

TOP VIEW

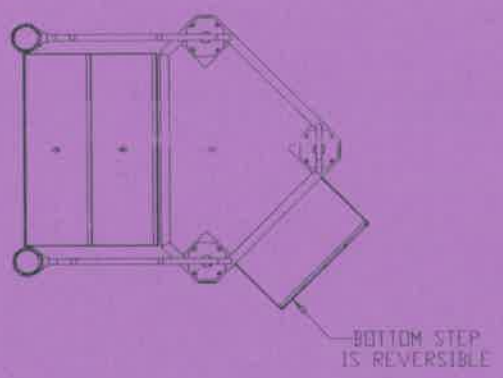

FOOTING LAYOUT

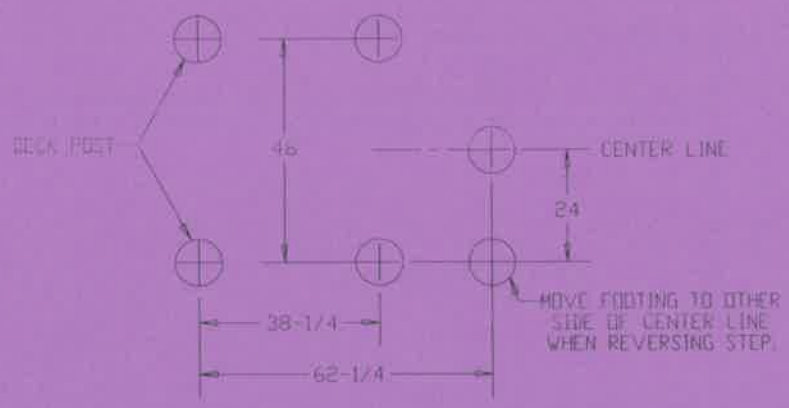

MODEL 714-965-4

TOP VIEW

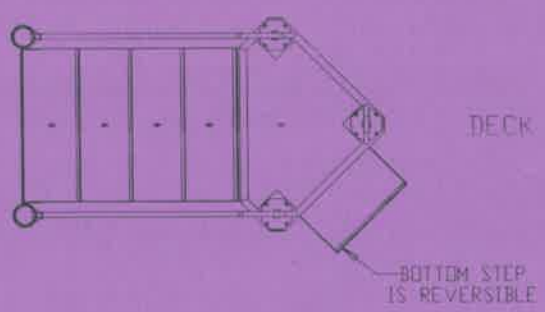

FOOTING LAYOUT

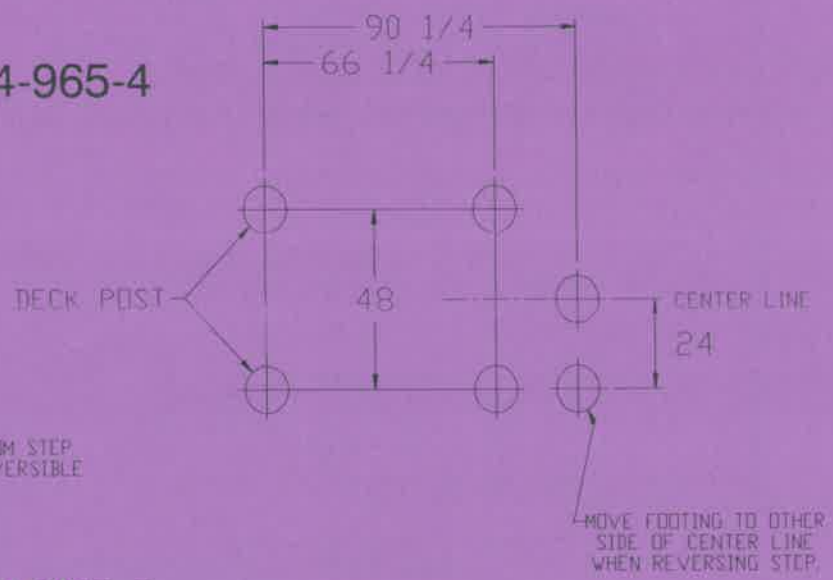

MODEL 714-965-5

TOP VIEW

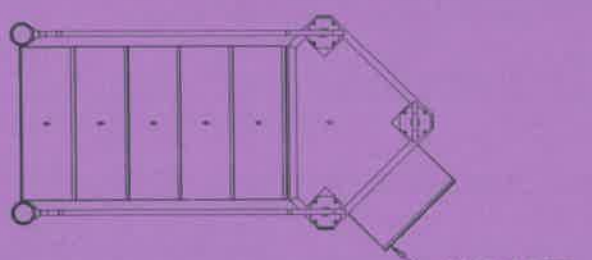

FOOTING LAYOUT

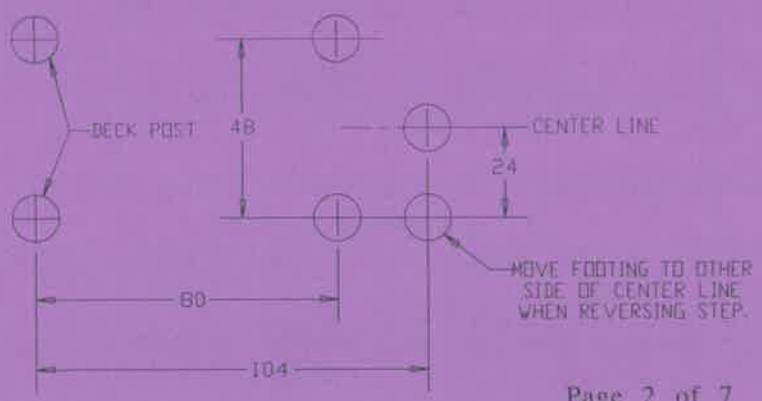

IMPORTANT NOTES

1. Before installing or erecting this equipment, please read and comply with all applicable recommendations in Safety Brochure 100 enclosed. If for some reason this brochure is missing, contact your local Miracle sales representative for a copy.

2. Before starting construction, check with all utility companies for exact locations of underground utilities.

3. When designing areas for footings and the area under and adjacent to all equipment, consideration should be given to soil types and subgrade characteristics. The purchaser and/or installing contractor will be responsible for proper installation and insuring that abnormal and unsafe compaction does not occur in these areas, which are generally recommended to be under and a minimum of 6' out from the edges of all play structures.

4. It is the purchaser's responsibility to maintain these areas properly after installation. It is recommended that compaction tests be made several times per year. When compaction occurs, it is recommended that the area affected be scarified or additional pea gravel, sand, redwood bark or coarse wood chips be added until the area is soft and resilient.

FOOTINGS

Dig the footings as shown in Footing Layouts on page 2.

Refer to *Footing Details* Installation.

Note: ***Do not pour concrete for footings until all components in your deck system have been installed per installation instructions, leveled, plumbed and braced in position.***

STEP 1	Attach tops of stair handrails to deck posts using clamps.

Refer to *Versa-Lok®* *Clamp Assembly* Installation.

STEP 2	From the top view, determine the direction and orientation of the 983000P Bottom Step handrail and the 983006P (3'), 983979P (4'), or 982995P (5') Transfer Point-to-Deck handrails relative to the 982987P Tri-deck. With a 7/16" drill bit, remove excess pvc from the four (4) bolting holes (12 total) positioned around each post hole in each corner of tri-deck until attachment plate comes in contact with the deck.

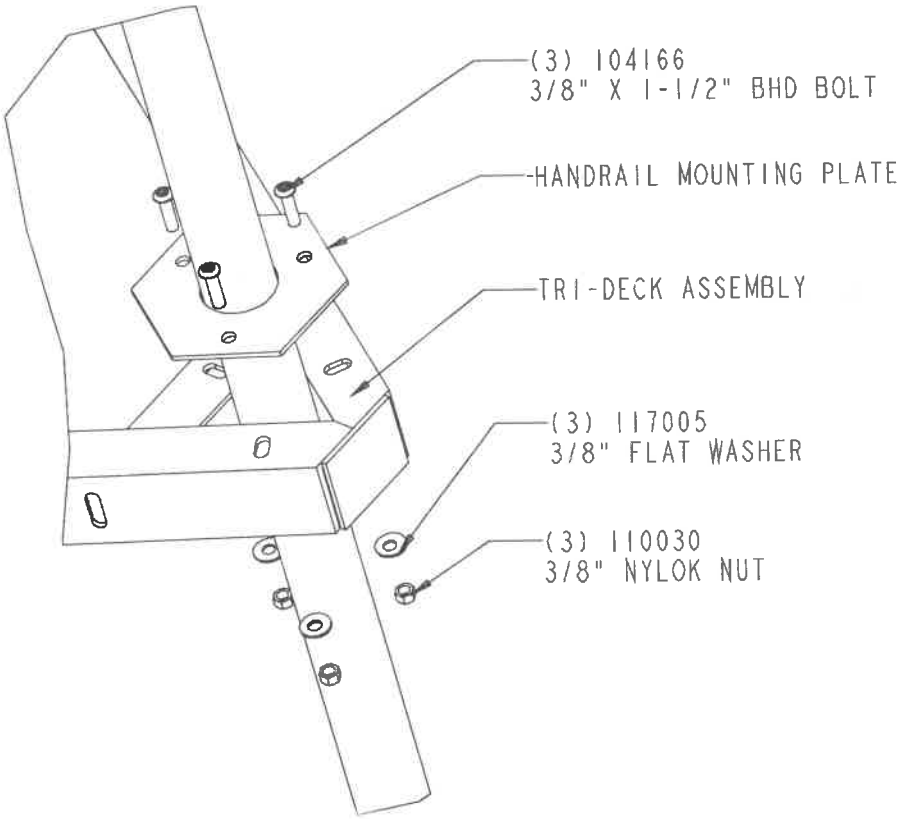

STEP 3	Fasten handrails with (3) sets of 3/8" x 1-1/2" button head bolt with flat washer and Nylock nut from underneath side of tri-deck.

STEP 4	Remove excess pvc from four holes in deck edge and in four holes in top end of step section with 7/16" drill bit.

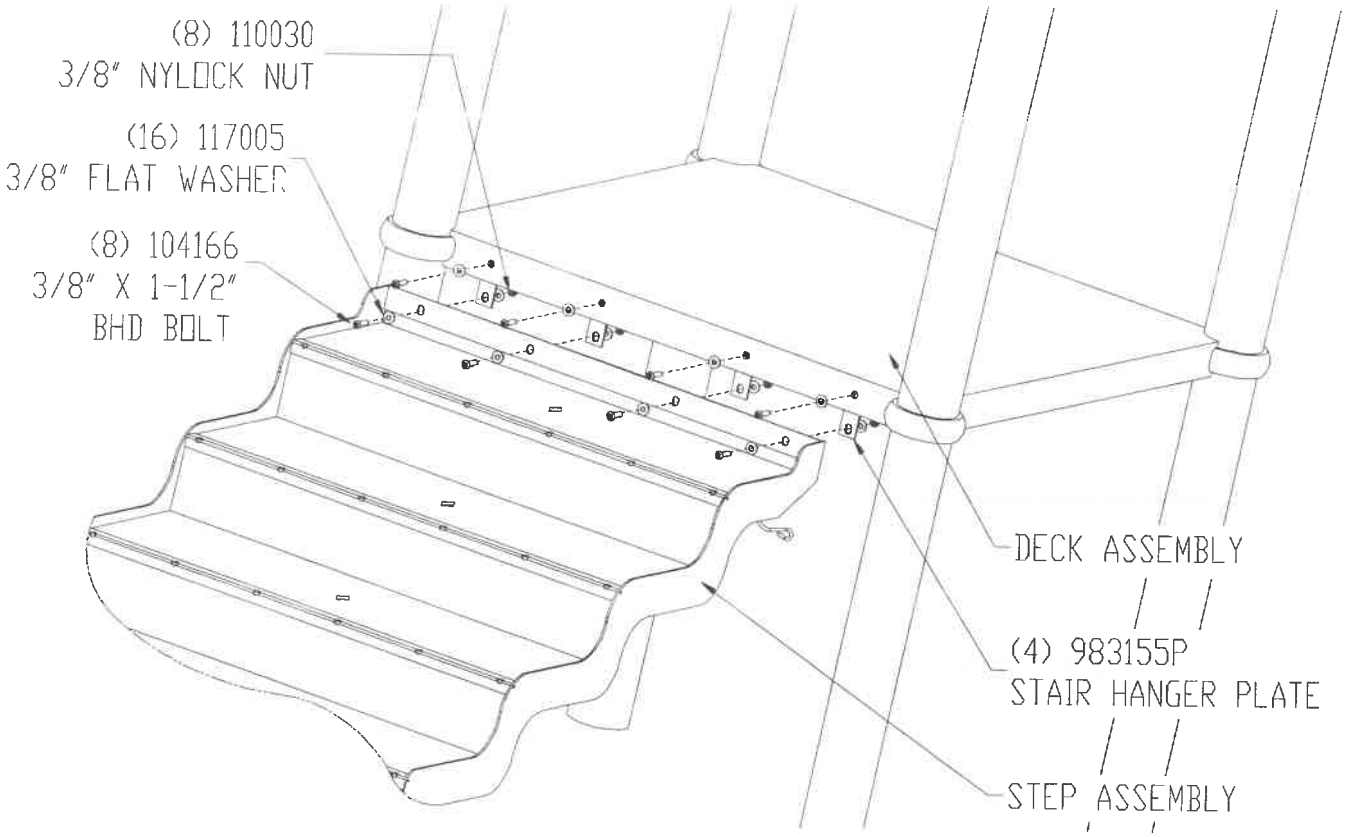

STEP 5	Attach four 983155P hanger plates to back side of deck edge

STEP 6	Align holes in top of step hanger plates on deck and fasten.

STEP 7	With 7/16" drill bit, remove excess pvc from four holes in bottom of step section and corresponding holes in tri-deck edge.

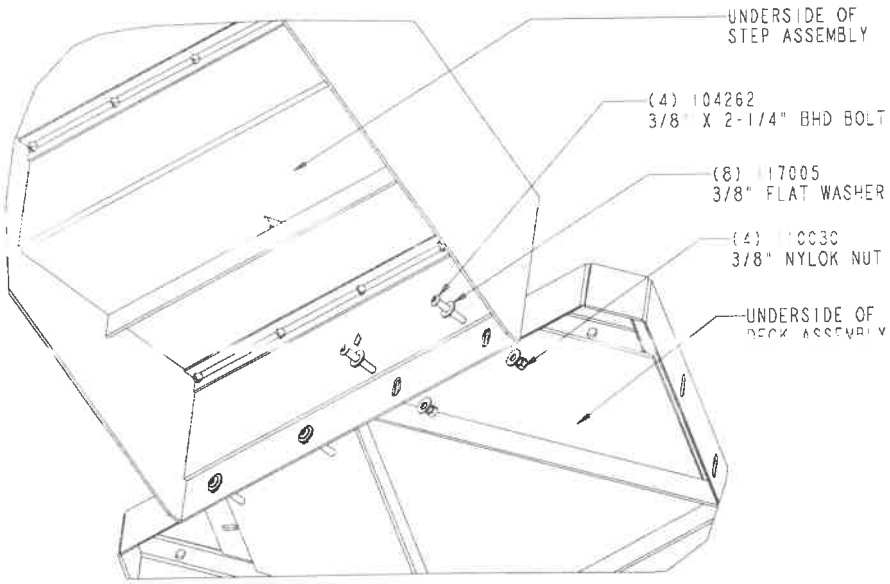

STEP 8	Fasten step section to deck edge. Tri-deck should be positioned between 14" and 18" above ground.

STEP 9	Remove excess pvc from slots in each side of 713872P bottom step section.

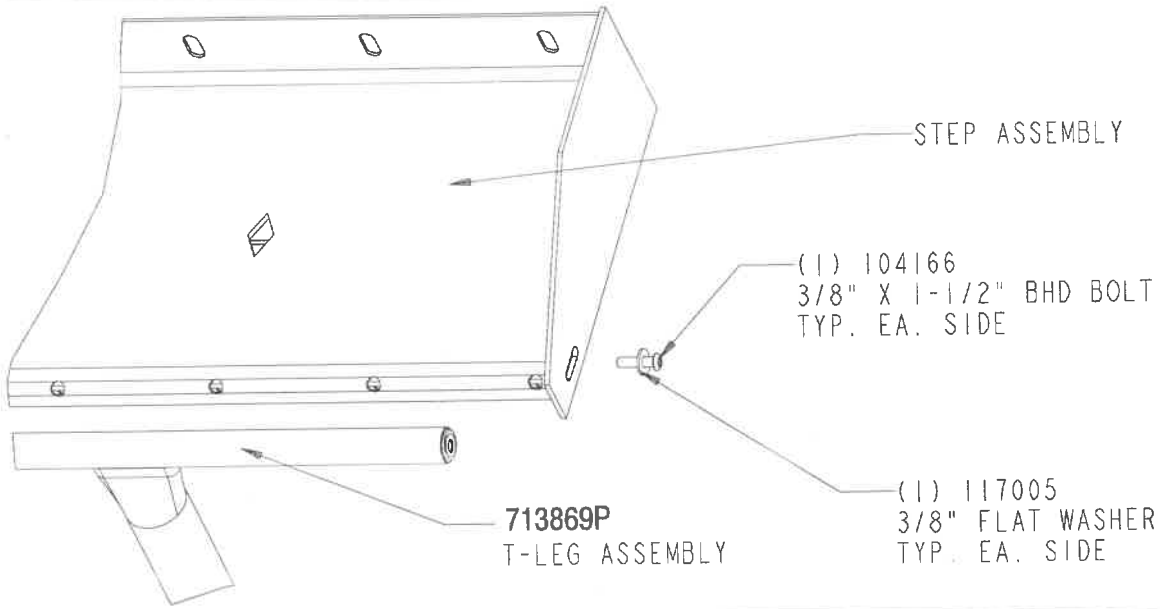

STEP 10	Align slots with inserts in end of 713869P "T"-leg. Fasten step to "T"-leg through slots into insert at each side of section. Set "T"-leg with step section into footing hole.

STEP 11	Remove excess pvc from four holes in tri-deck edge and in four holes in top end of step section with 7/16" drill bit.

STEP 12	Attach four 983155P hanger plates to back side of tri-deck edge with 3/8" x 1-1/2" button head bolt and flat washer from front and Nylock nut and flat washer from back.

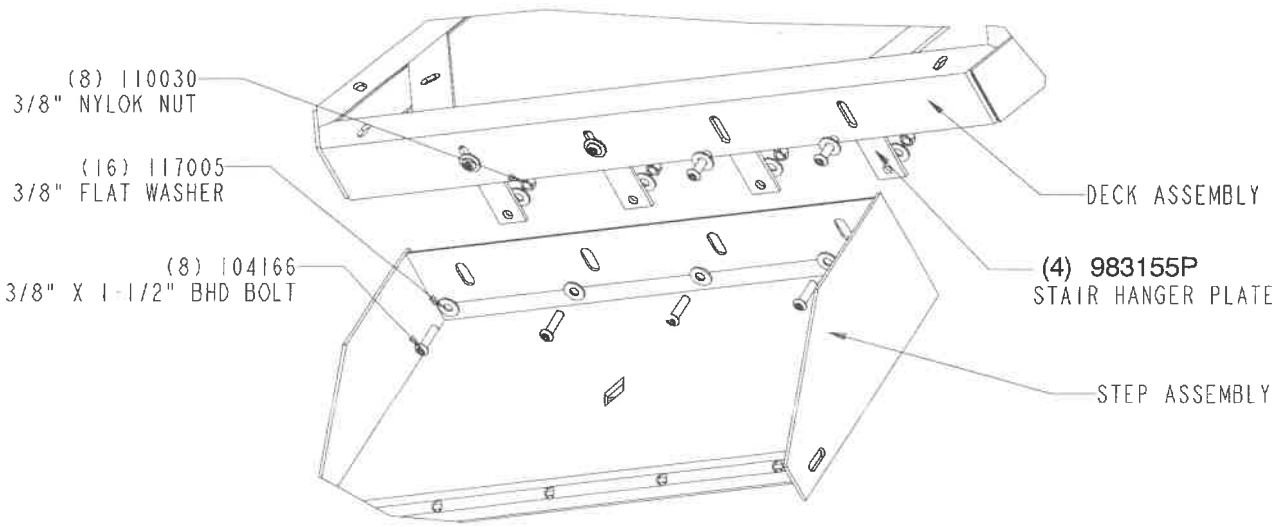

STEP 13	Align holes in top of step hanger plates on tri-deck and fasten.

FINAL STEP	**Refer to *Final Assembly* Installation.**

INSTALLATION INSTRUCTIONS

Model 714-995: Cargo Climber from a 5' Deck
Model 714-995-1: Cargo Climber with Handhold from a 5' Deck
Model 714-996: Cargo Climber from a 3' Deck
Model 714-996-1: Cargo Climber with Handhold from a 3' Deck

August 18, 1997 Rev. C

MIRACLE
RECREATION EQUIPMENT COMPANY

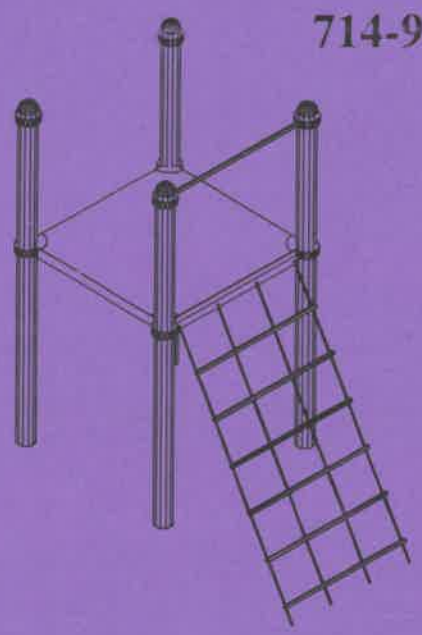

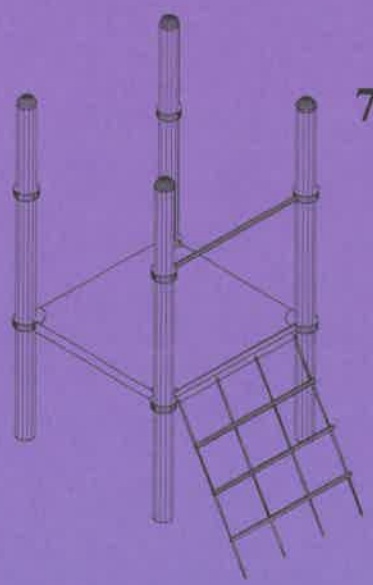

TOP VIEW

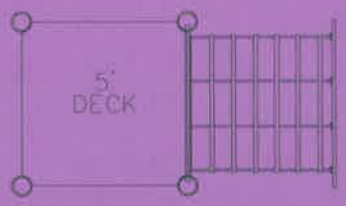

CARGO CLIMBER
714-995 (shown)
714-995-1

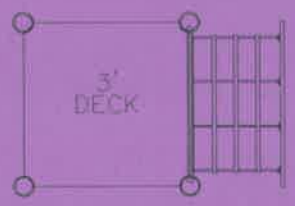

CARGO CLIMBER
714-996 (shown)
714-996-1

FOOTING LAYOUT

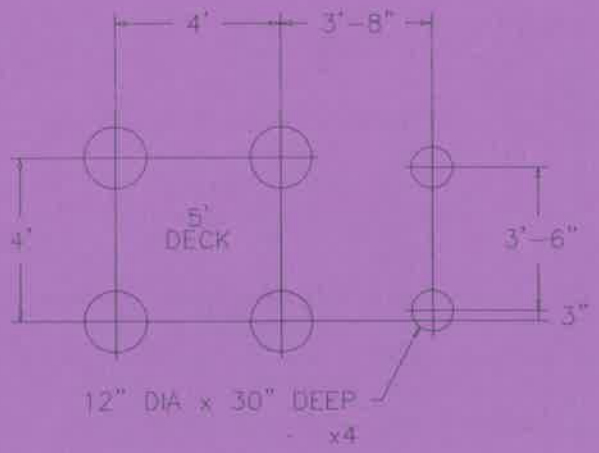

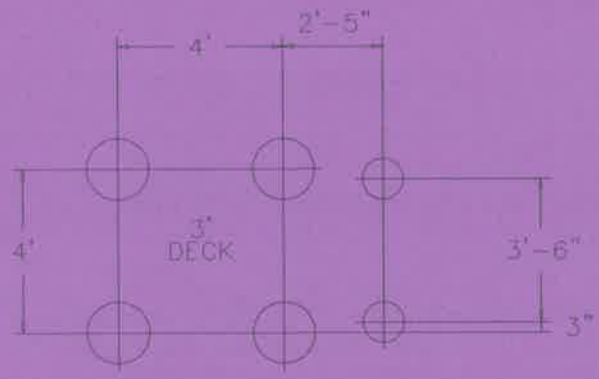

IMPORTANT NOTES

1. Before installing or erecting this equipment, please read and comply with all applicable recommendations in Safety Brochure 100 enclosed. If for some reason this brochure is missing, contact your local Miracle sales representative for a copy.

2. Before starting construction, check with all utility companies for exact locations of underground utilities.

3. When designing areas for footings and the area under and adjacent to all equipment, consideration should be given to soil types and subgrade characteristics. The purchaser and/or installing contractor will be responsible for proper installation and insuring that abnormal and unsafe compaction does not occur in these areas, which are generally recommended to be under and a minimum of 6' out from the edges of all play structures.

4. It is the purchaser's responsibility to maintain these areas properly after installation. It is recommended that compaction tests be made several times per year. When compaction occurs, it is recommended that the area affected be scarified or additional pea gravel, sand, redwood bark or coarse wood chips be added until the area is soft and resilient.

FOOTINGS

Two footings are required for the cargo climber anchor, 12" in diameter by 30" deep and 3'-6" center to center. The footing distance from the platform, for models without side handholds, are determined depending on how tight or loose you want the cargo climber to be.

Refer to *Footing Details* Installation.

Note: ***Do not pour concrete for footings until all components in your deck system have been installed per installation instructions, leveled, plumbed and braced in position.***

STEP 1	Raise the handhold to 38" above the edge of the deck and attach to posts using the clamps.

Refer to *Versa-Lok® Clamp Assembly* Installation.

STEP 2A	Attach the rung with loops to the side of the deck. Position loops outward pointing toward footings and tighten.

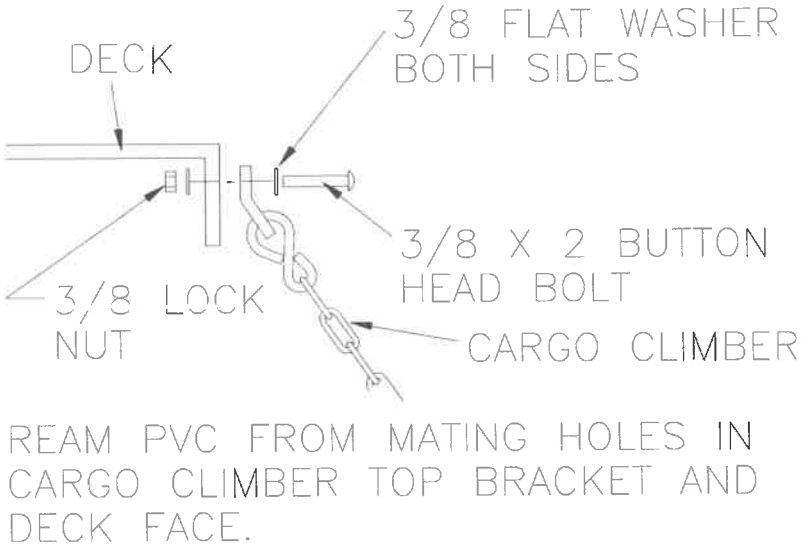

For models with side handholds:

STEP 2B	Position each top (deck) end of the side handholds against deck face and attach by bolting through the deck into the end of the side handhold. The side handhold has threaded inserts to receive bolts.

STEP 2C	Bolt through side handholds into ends of anchor. The anchor has threaded inserts to receive bolts.

For all models:

STEP 3	Place the ends of the anchor in the footings with the loops pointing toward the deck. Attach the "S" hooks on the bottom of the cargo climber to the loops of the anchor. Close all "S" hooks metal to metal.

STEP 4	With the center of the anchor resting on the ground, pull the anchor away from the deck to adjust the desired tension. Block and brace anchor in this position.

CARGO CLIMBER TO ANCHOR

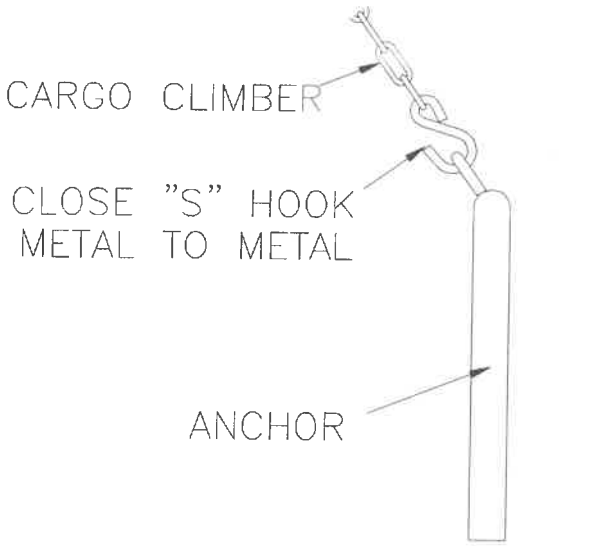

FINAL STEP	**Refer to *Final Assembly* Installation.**

MIRACLE
RECREATION EQUIPMENT COMPANY

INSTALLATION INSTRUCTIONS

IMAGINATION PANELS BELOW DECK AND IN CLUSTER ARRANGEMENT

714-713-1B: Television
714-713-2B: Puppet Stage
714-713-3B: Window
714-713-4B: Computer
714-713-5B: Door
714-713-6B: Bank Teller
714-713-7B: General Store

714-714-1B: Park Ranger
714-714-2B: Fire Truck
714-714-3B: Police
714-714-4B: Train
714-714-5B: Taxi

714-715-1B: Alphabet
714-715-2B: Maze Finger
714-715-4B: Calculator
714-715-6B: Bus Stop

November 5, 1996 Rev. B

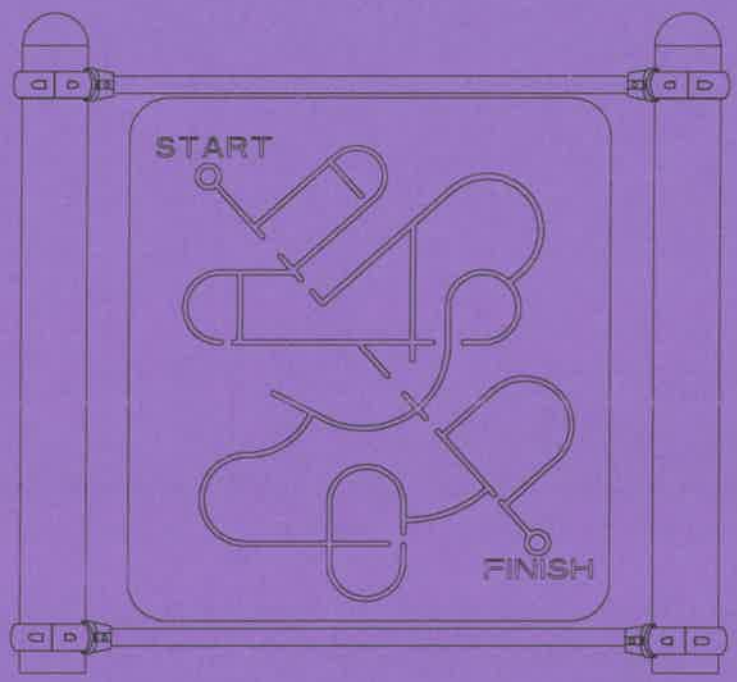

714-713-1B
714-713-2B
714-713-3B
714-713-4B
714-713-5B
714-713-6B
714-713-7B

714-714-1B
714-714-2B
714-714-3B
714-714-4B
714-714-5B
714-715-1B
714-715-2B (shown)
714-715-4B
714-715-6B

INSTALLATION INSTRUCTIONS

IMAGINATION PANELS BELOW DECK AND IN CLUSTER ARRANGEMENT

714-713-1B: Television
714-713-2B: Puppet Stage
714-713-3B: Window
714-713-4B: Computer
714-713-5B: Door
714-713-6B: Bank Teller
714-713-7B: General Store

714-714-1B: Park Ranger
714-714-2B: Fire Truck
714-714-3B: Police
714-714-4B: Train
714-714-5B: Taxi

714-715-1B: Alphabet
714-715-2B: Maze Finger
714-715-4B: Calculator
714-715-6B: Bus Stop

November 5, 1996 Rev. B

FOOTINGS

Dig the footings and place posts.

TOP VIEW

FREESTANDING ACTIVITY PANEL

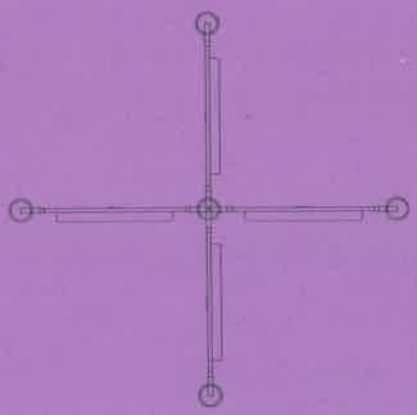

CLUSTER OF ACTIVITY PANELS (4) SHOWN

FOOTING LAYOUT

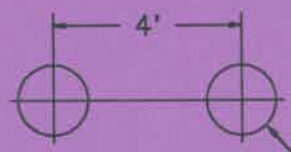

12" DIA X 30" DEEP FOOTING (2) REQ'D

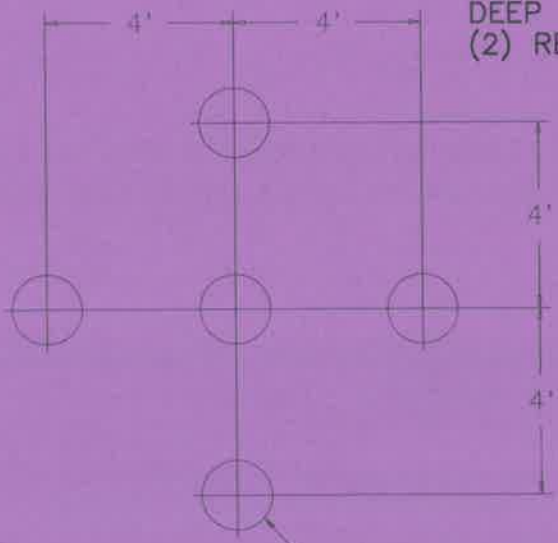

12" DIA X 30" DEEP FOOTING (5) REQ'D

FOOTING DETAIL

SCALE: NONE

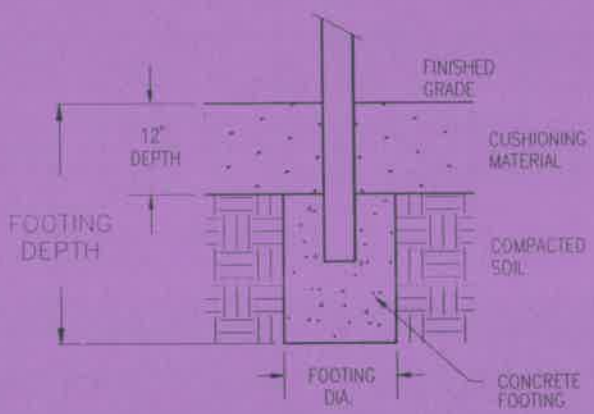

Note: Do not pour concrete for component activity footings until all components in your deck system have been installed per installation instructions, leveled, plumbed and braced in position.

IMAGINATION PANELS BELOW DECK AND IN CLUSTER ARRANGEMENT

714-713-1B: Television
714-713-2B: Puppet Stage
714-713-3B: Window
714-713-4B: Computer
714-713-5B: Door
714-713-6B: Bank Teller
714-713-7B: General Store

714-714-1B: Park Ranger
714-714-2B: Fire Truck
714-714-3B: Police
714-714-4B: Train
714-714-5B: Taxi

714-715-1B: Alphabet
714-715-2B: Maze Finger
714-715-4B: Calculator
714-715-6B: Bus Stop

November 5, 1996 Rev. B

IMPORTANT NOTES

1. Before installing or erecting this equipment, please read and comply with all applicable recommendations in Safety Brochure 100 enclosed. If for some reason this brochure is missing, contact your local Miracle sales representative for a copy.

2. Before starting construction, check with all utility companies for exact locations of underground utilities.

3. When designing areas for footings and the area under and adjacent to all equipment, consideration should be given to soil types and subgrade characteristics. The purchaser and/or installing contractor will be responsible for proper installation and insuring that abnormal and unsafe compaction does not occur in these areas, which are generally recommended to be under and a minimum of 6' out from the edges of all play structures.

4. It is the purchaser's responsibility to maintain these areas properly after installation. It is recommended that compaction tests be made several times per year. When compaction occurs, it is recommended that the area affected be scarified or additional pea gravel, sand, redwood bark or coarse wood chips be added until the area is soft and resilient.

INSTALLATION INSTRUCTIONS

IMAGINATION PANELS BELOW DECK AND IN CLUSTER ARRANGEMENT

714-713-1B: Television
714-713-2B: Puppet Stage
714-713-3B: Window
714-713-4B: Computer
714-713-5B: Door
714-713-6B: Bank Teller
714-713-7B: General Store

714-714-1B: Park Ranger
714-714-2B: Fire Truck
714-714-3B: Police
714-714-4B: Train
714-714-5B: Taxi

714-715-1B: Alphabet
714-715-2B: Maze Finger
714-715-4B: Calculator
714-715-6B: Bus Stop

November 5, 1996 Rev. B

ASSEMBLY

1. Attach top and bottom panel supports to panel. Bottom support attaches in same manner as top support.

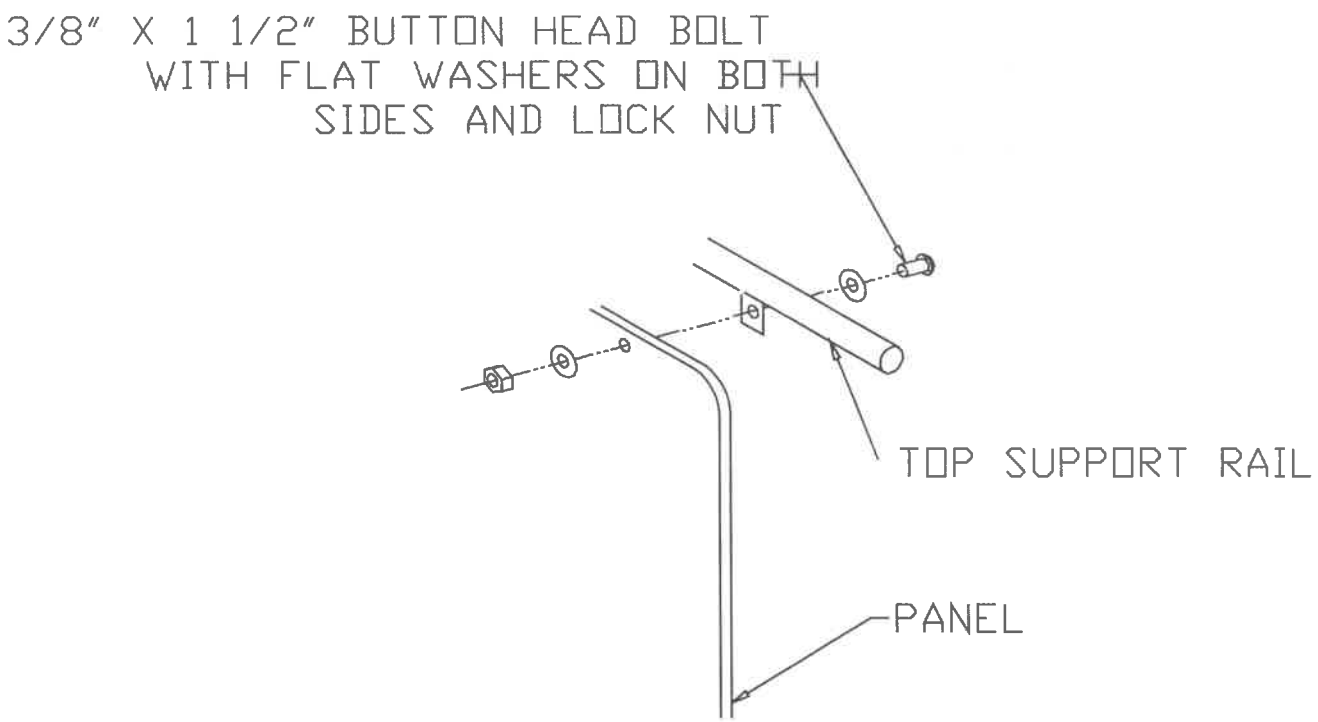

714-713-1B: Television
714-713-2B: Puppet Stage
714-713-3B: Window
714-713-4B: Computer
714-713-5B: Door
714-713-6B: Bank Teller
714-713-7B: General Store

714-714-1B: Park Ranger
714-714-2B: Fire Truck
714-714-3B: Police
714-714-4B: Train
714-714-5B: Taxi

714-715-1B: Alphabet
714-715-2B: Maze Finger
714-715-4B: Calculator
714-715-6B: Bus Stop

November 5, 1996 Rev. B

ASSEMBLY

2. Insert each rung end into a bar socket and slide bar socket onto clamp half.

3. Attach each clamp assembly around one of the posts with center of clamps at 38" above deck surface, securing enclosure and bar sockets with set screws.

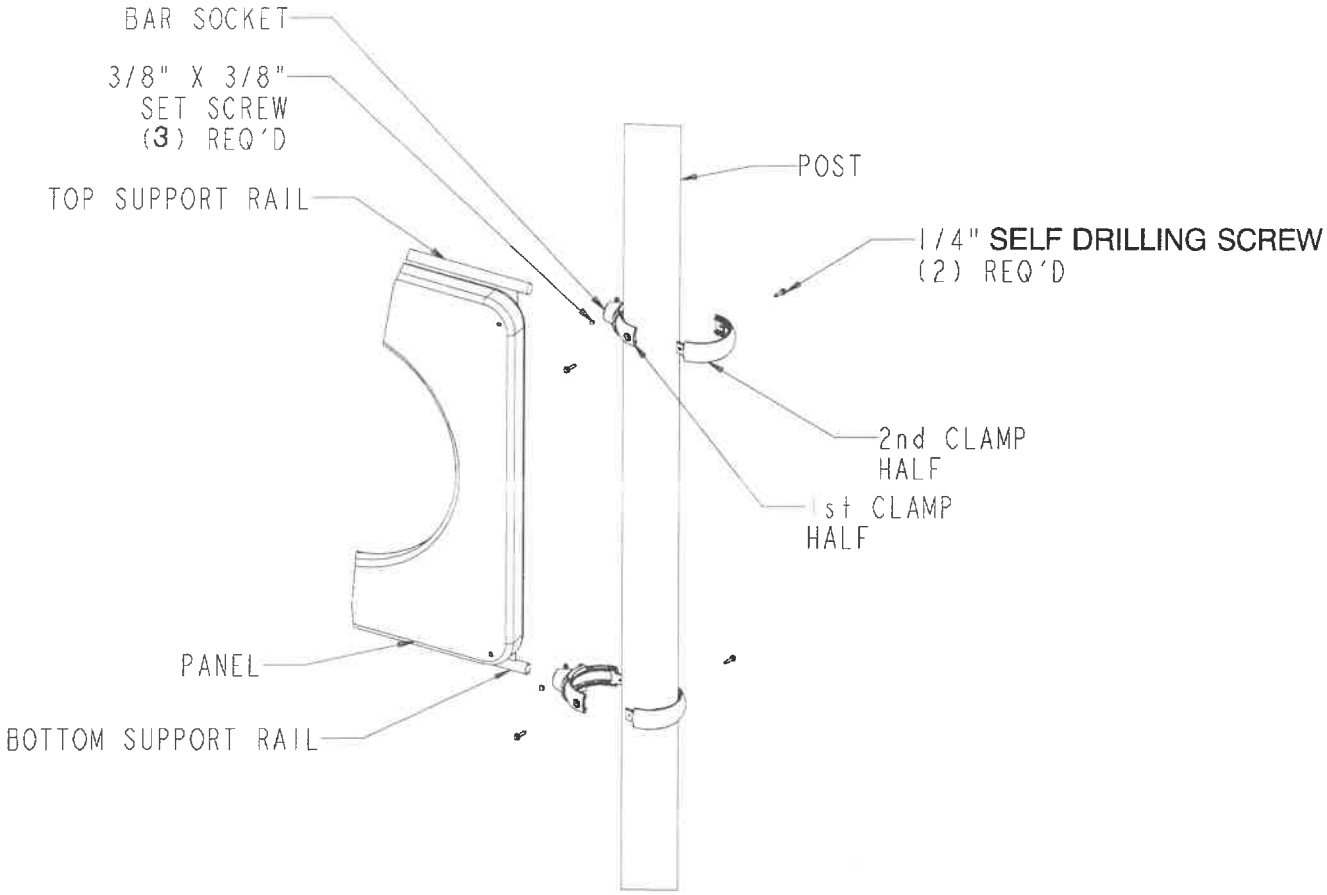

ASSEMBLE POST CLAMPS AND BAR SOCKET TOGETHER AS SHOWN USING THE PANEL ASSEMBLY TO LOCATE HEIGHT AND ROTATION

For models without steering wheel, proceed to step 6.

For models with steering wheel, proceed to steps 4 and 5 following:

INSTALLATION INSTRUCTIONS

IMAGINATION PANELS BELOW DECK AND IN CLUSTER ARRANGEMENT

714-713-1B: Television
714-713-2B: Puppet Stage
714-713-3B: Window
714-713-4B: Computer
714-713-5B: Door
714-713-6B: Bank Teller
714-713-7B: General Store

714-714-1B: Park Ranger
714-714-2B: Fire Truck
714-714-3B: Police
714-714-4B: Train
714-714-5B: Taxi

714-715-1B: Alphabet
714-715-2B: Maze Finger
714-715-4B: Calculator
714-715-6B: Bus Stop

November 5, 1996 Rev. B

ASSEMBLY

4. Attach wheel to panel.

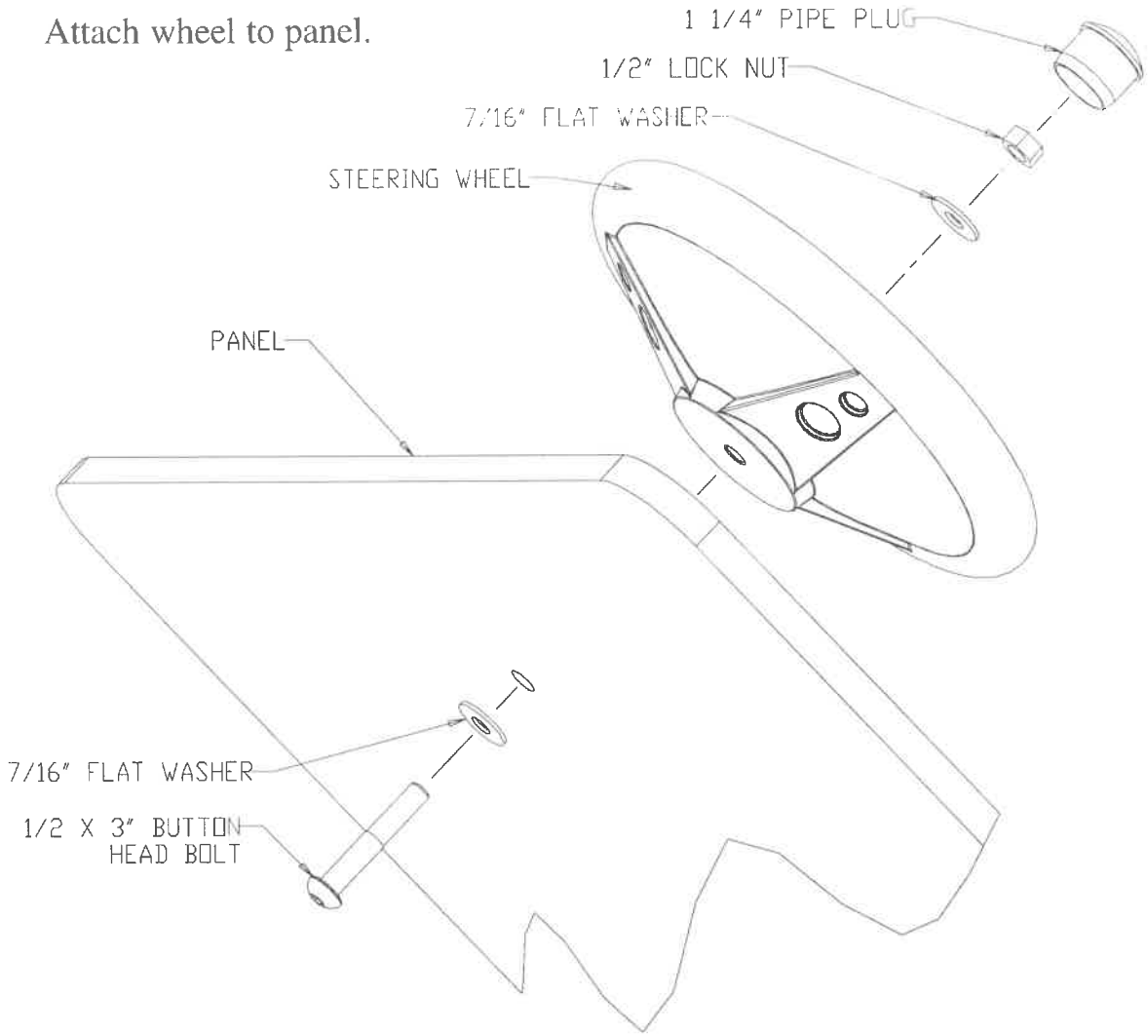

5. Attach center cover.

714-713-1B: Television
714-713-2B: Puppet Stage
714-713-3B: Window
714-713-4B: Computer
714-713-5B: Door
714-713-6B: Bank Teller
714-713-7B: General Store

714-714-1B: Park Ranger
714-714-2B: Fire Truck
714-714-3B: Police
714-714-4B: Train
714-714-5B: Taxi

714-715-1B: Alphabet
714-715-2B: Maze Finger
714-715-4B: Calculator
714-715-6B: Bus Stop

November 5, 1996 Rev. B

FINAL ASSEMBLY

6. Plumb and level the assembly.

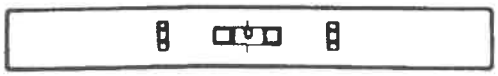

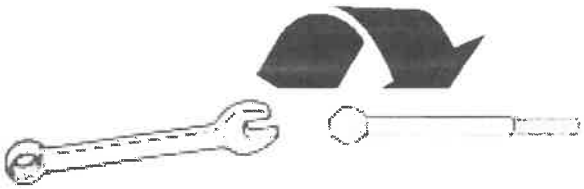

Make sure all fasteners are tight.

Trim all bolts. No more than two threads may protrude after trimming by installer.

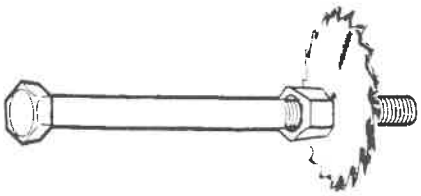

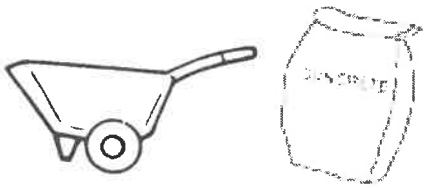

Pour concrete and allow 72 hours to cure.

Install 12" of cushioning material in and around the area required for the unit.

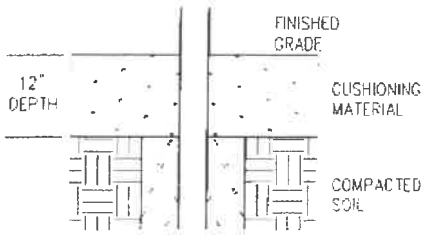

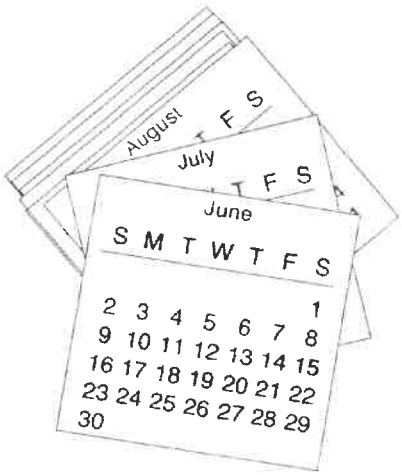

Establish a regular maintenance schedule, checking for loose or missing bolts, worn parts, etc.

714-713-1B: Television
714-713-2B: Puppet Stage
714-713-3B: Window
714-713-4B: Computer
714-713-5B: Door
714-713-6B: Bank Teller
714-713-7B: General Store

714-714-1B: Park Ranger
714-714-2B: Fire Truck
714-714-3B: Police
714-714-4B: Train
714-714-5B: Taxi

714-715-1B: Alphabet
714-715-2B: Maze Finger
714-715-4B: Calculator
714-715-6B: Bus Stop

November 5, 1996 Rev. B

BILL OF MATERIALS

PART NO.	QTY-PER U/M	DESCRIPTION
Model 714-713-1B		
713500P	2 EA	4 CLAMP HALF RINGS WITH HARDWARE
982408	1 EA	TELEVISION PANEL
982501P	2 EA	PANEL SUPPORT RAIL ASSEMBLIES
982628P	1 EA	PARTS CARTON
Model 714-713-2B		
713500P	2 EA	4 CLAMP HALF RINGS WITH HARDWARE
982414	1 EA	PUPPET STAGE PANEL
982501P	2 EA	PANEL SUPPORT RAIL ASSEMBLIES
982628P	1 EA	PARTS CARTON
Model 714-713-3B		
713500P	2 EA	4 CLAMP HALF RINGS WITH HARDWARE
982420	1 EA	WINDOW PANEL
982501P	2 EA	PANEL SUPPORT RAIL ASSEMBLIES
982628P	1 EA	PARTS CARTON
Model 714-713-4B		
713500P	2 EA	4 CLAMP HALF RINGS WITH HARDWARE
982421	1 EA	COMPUTER PANEL
982501P	2 EA	PANEL SUPPORT RAIL ASSEMBLIES
982628P	1 EA	PARTS CARTON
Model 714-713-5B		
713500P	2 EA	4 CLAMP HALF RINGS WITH HARDWARE
982423	1 EA	DOOR PANEL
982501P	2 EA	PANEL SUPPORT RAIL ASSEMBLIES
982628P	1 EA	PARTS CARTON
983209P	2 EA	BRACKET RUNG ASSEMBLY
Model 714-713-6B		
713500P	2 EA	4 CLAMP HALF RINGS WITH HARDWARE
982415	1 EA	BANK TELLER PANEL
982501P	1 EA	PANEL SUPPORT RAIL ASSEMBLIES
982628P	1 EA	PARTS CARTON

INSTALLATION INSTRUCTIONS

IMAGINATION PANELS BELOW DECK AND IN CLUSTER ARRANGEMENT

714-713-1B: Television
714-713-2B: Puppet Stage
714-713-3B: Window
714-713-4B: Computer
714-713-5B: Door
714-713-6B: Bank Teller
714-713-7B: General Store

714-714-1B: Park Ranger
714-714-2B: Fire Truck
714-714-3B: Police
714-714-4B: Train
714-714-5B: Taxi

714-715-1B: Alphabet
714-715-2B: Maze Finger
714-715-4B: Calculator
714-715-6B: Bus Stop

November 5, 1996 Rev. B

PART NO.	QTY-PER U/M	DESCRIPTION
Model 714-713-7B		
713500P	2 EA	4 CLAMP HALF RINGS WITH HARDWARE
982442	1 EA	GENERAL STORE PANEL
982501P	2 EA	PANEL SUPPORT RAIL ASSEMBLIES
982628P	1 EA	PARTS CARTON
Model 714-714-1B		
713500P	2 EA	4 CLAMP HALF RINGS WITH HARDWARE
982411	1 EA	WHEEL PANEL, PARK RANGER
982501P	2 EA	PANEL SUPPORT RAIL ASSEMBLIES
982629P	1 EA	PARTS CARTON
Model 714-714-2B		
713500P	2 EA	4 CLAMP HALF RINGS WITH HARDWARE
982412	1 EA	WHEEL PANEL, FIRE TRUCK
982501P	2 EA	PANEL SUPPORT RAIL ASSEMBLIES
982629P	1 EA	PARTS CARTON
Model 714-714-3B		
713500P	2 EA	4 CLAMP HALF RINGS WITH HARDWARE
982413	1 EA	WHEEL PANEL, POLICE CAR
982501P	2 EA	PANEL SUPPORT RAIL ASSEMBLIES
982629P	1 EA	PARTS CARTON
Model 714-714-4B		
713500P	2 EA	4 CLAMP HALF RINGS WITH HARDWARE
982424	1 EA	WHEEL PANEL, TRAIN
982501P	2 EA	PANEL SUPPORT RAIL ASSEMBLIES
982629P	1 EA	PARTS CARTON
Model 714-714-5B		
713500P	2 EA	4 CLAMP HALF RINGS WITH HARDWARE
982425	1 EA	WHEEL PANEL, TAXI
982501P	2 EA	PANEL SUPPORT RAIL ASSEMBLIES
982629P	1 EA	PARTS CARTON
Model 714-715-1B		
713500P	2 EA	4 CLAMP HALF RINGS WITH HARDWARE
982416	1 EA	ALPHABET PANEL
982501P	2 EA	PANEL SUPPORT RAIL ASSEMBLIES
982628P	1 EA	PARTS CARTON

IMAGINATION PANELS BELOW DECK AND IN CLUSTER ARRANGEMENT

714-713-1B: Television
714-713-2B: Puppet Stage
714-713-3B: Window
714-713-4B: Computer
714-713-5B: Door
714-713-6B: Bank Teller
714-713-7B: General Store

714-714-1B: Park Ranger
714-714-2B: Fire Truck
714-714-3B: Police
714-714-4B: Train
714-714-5B: Taxi

714-715-1B: Alphabet
714-715-2B: Maze Finger
714-715-4B: Calculator
714-715-6B: Bus Stop

November 5, 1996 Rev. B

PART NO.	QTY-PER U/M	DESCRIPTION

Model 714-715-2B

713500P	2 EA	4 CLAMP HALF RINGS WITH HARDWARE
982418	1 EA	MAZE FINGER PANEL
982501P	2 EA	PANEL SUPPORT RAIL ASSEMBLIES
982628P	1 EA	PARTS CARTON

Model 714-715-4B

713500P	2 EA	4 CLAMP HALF RINGS WITH HARDWARE
982422	1 EA	CALCULATOR PANEL
982501P	2 EA	PANEL SUPPORT RAIL ASSEMBLIES
982628P	1 EA	PARTS CARTON

Model 714-715-6B

713500P	2 EA	4 CLAMP HALF RINGS WITH HARDWARE
982460	1 EA	BUS STOP PANEL
982501P	2 EA	PANEL SUPPORT RAIL ASSEMBLIES
982628P	1 EA	PARTS CARTON

PARTS CARTONS

PARTS CARTON (713500P - 4 CLAMP HALF RINGS WITH HARDWARE) CONTENTS :

104403	4 EA	SET SCREW, WASHER HEAD, SELF DRILLING, 1/4 X 1, SS
713100P	4 EA	CLAMP HALF RING, KC

PARTS CARTON (982628P) CONTENTS

104166	4 EA	BOLT, BUTTON HEAD, 6-LOBE, 3/8-16 X 1-1/2, SS
104285	12 EA	SET SCREW, SOCKET, 3/8-16 X 3/8, SS
110030	4 EA	NUT, NYLOCK, 3/8-16 X 3/8, SS
117005	8 EA	WASHER, FLAT, 3/8
713101P	4 EA	BAR SOCKET, TC

PARTS CARTON (982629P) CONTENTS

103529	1 EA	1-1/4" PIPE PLUG
104166	4 EA	BOLT, BUTTON HEAD, 6-LOBE, 3/8-16 X 1-1/2, SS
104278	1 EA	BOLT, BUTTON HEAD, 6-LOBE, 1/2-13 X 3, SS
104285	12 EA	SET SCREW, SOCKET, 3/8-16 X 3/8, SS
110030	4 EA	NUT, NYLOCK, 3/8, SS
110061	1 EA	NUT, NYLOCK, 1/2, SS
112596	1 EA	STEERING WHEEL
117005	8 EA	WASHER, FLAT, 3/8
117007	2 EA	WASHER, FLAT, 7/16
713101P	4 EA	BAR SOCKET, KC

INSTALLATION INSTRUCTIONS

MIRACLE
RECREATION EQUIPMENT COMPANY

PANEL MODELS BELOW DECK AND IN CLUSTER ARRANGEMENTS

714-716B: View Groove
714-875B: Bubble
714-876B: Hole
714-904B: Clock
714-923B: Color Ball
714-924B: Letter Ball
714-925B: Number Ball
714-980-4B: Convex Mirror
714-980-5B: Flat Mirror
714-982-2B: Number Finger Maze
714-982-3B: Finger Maze
714-982-4B: Letter Finger Maze
714-983-1B: Marble Race
714-983-2B: Motor Skill

714-875B (shown)
714-876B

714-904B

714-716B

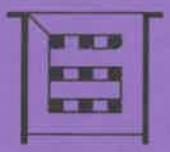

714-923B

714-924B

714-925B

714-980-4B
714-980-5B

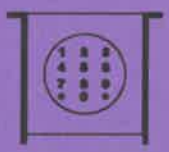

714-982-2B

714-982-3B

714-982-4B

714-983-1B

714-983-2B

PANEL MODELS BELOW DECK AND IN CLUSTER ARRANGEMENTS

TOP VIEW

FREESTANDING
ACTIVITY PANEL

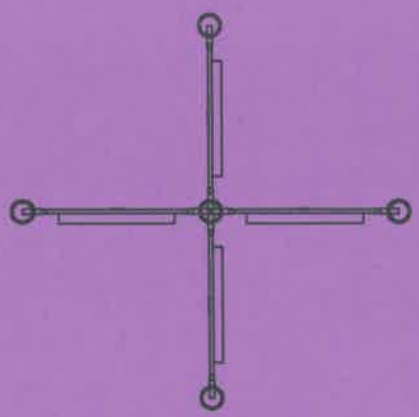

CLUSTER OF
ACTIVITY PANELS
(4) SHOWN

FOOTING LAYOUT

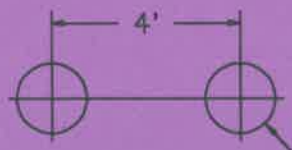

12" DIA X 30"
DEEP FOOTING
(2) REQ'D

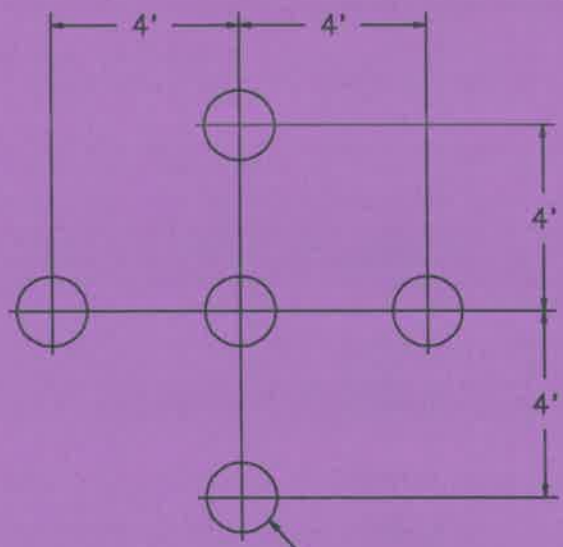

12" DIA X 30"
DEEP FOOTING
(5) REQ'D

PANEL MODELS BELOW DECK AND IN CLUSTER ARRANGEMENTS

PART I - GENERAL

A. Ground Space Required: not applicable for these models

B. Concrete Required:

.125 cubic yards per post for models in a Cluster Configurations.

No additional concrete is required for any of the Below Deck models.

PART II INSTRUCTIONS AND IMPORTANT NOTES

Important Notes:

1. Before installing or erecting this equipment, please read and comply with all applicable recommendations in Safety Brochure 100 enclosed. If for some reason this brochure is missing, contact your local Miracle sales representative for a copy.

2. Before starting construction, check with all utility companies for exact locations of underground utilities.

3. When designing areas for footings and the area under and adjacent to all equipment, consideration should be given to soil types and subgrade characteristics. The purchaser and/or installing contractor will be responsible for proper installation and insuring that abnormal and unsafe compaction does not occur in these areas, which are generally recommended to be under and a minimum of 6' out from the edges of all play structures.

4. It is the purchaser's responsibility to maintain these areas properly after installation. It is recommended that compaction tests be made several times per year. When compaction occurs, it is recommended that the area affected be scarified or additional pea gravel, sand, redwood bark or coarse wood chips be added until the area is soft and resilient.

Footing Instructions (for models in cluster configs.):

1. ***Do not pour concrete for component activity footings until all components in your deck system have been installed per installation instructions, leveled, plumbed and braced in position.***

2. Dig the footings and place posts.

Refer to *Footing Details* Installation.

PANEL MODELS BELOW DECK AND IN CLUSTER ARRANGEMENTS

STEP 1	Insert enclosures into panel sides.

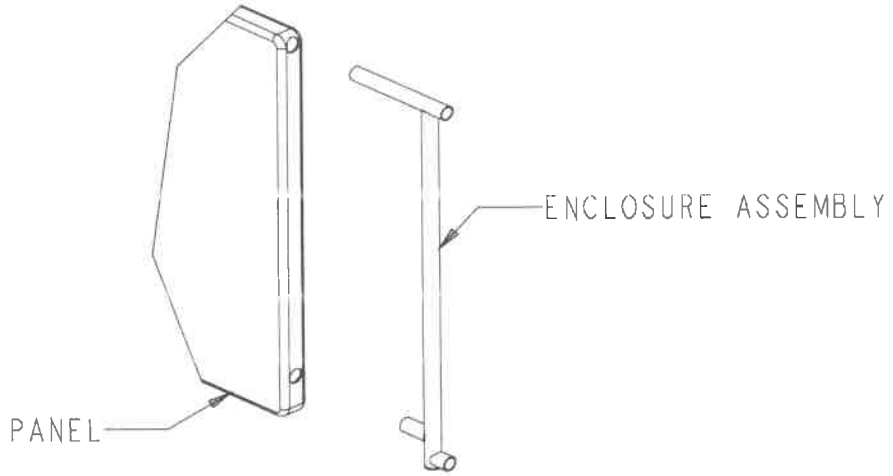

STEP 2	Attach enclosures to posts.

Refer to *Versa-Lok®* *Clamp Assembly* Installation.

FINAL STEP	**Refer to *Final Assembly* Installation.**

MIRACLE
RECREATION EQUIPMENT COMPANY

INSTALLATION INSTRUCTIONS
for
FINAL ASSEMBLY

May 29, 1997 Rev. A

Plumb and level the assembly.

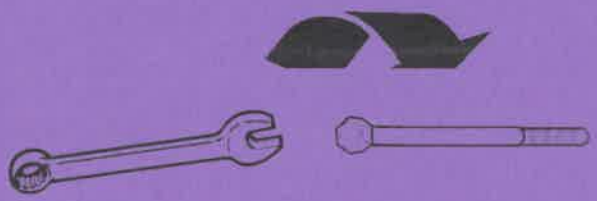

Make sure all fasteners are tight.

Trim all bolts. No more than two threads may protrude after trimming by installer.

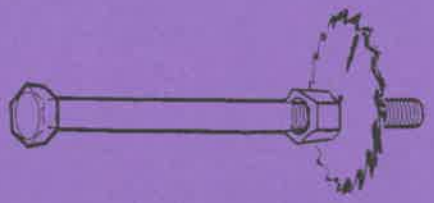

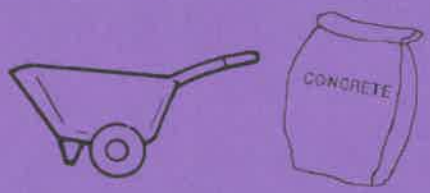

Pour concrete in all remaining footings and allow 72 hours to cure.

Install cushioning material in and around the area required for the unit.

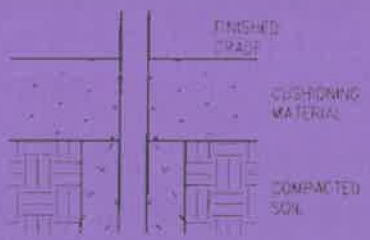

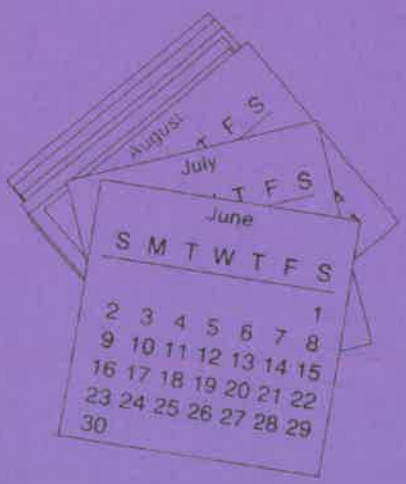

Establish a regular maintenance schedule, checking for loose or missing bolts, worn parts, etc.

BILL OF MATERIALS (PARTS LIST) 06/02/98 13:12:17

WORK ORDER: 435141 CUST #: 5544A04 SHIP DATE: W.O. PAGE: 1

CITY OF BROOKLYN PARK
PARK & RECRATION - GARY
5200 85TH AVENUE N.
BROOKLYN PARK MN 55443

LEGEND: * -> MODEL
**-> PARTS CARTON

REFER TO LAST PAGE OF PARTS LIST
FOR PARTS CARTON SUMMARY.

QUANTITY		MODEL/COMPONENT	DESCRIPTION
3	*	714502	DECK SQUARE W/H'WARE
3	**	713266	PARTS CARTON 714502
12		104488	BOLT 1/2-13 X 1 1/4 BHCS 6 LOBE
3		116021	MIRACLE ID LABEL - GENERIC
3		116022	WARNING LABEL PLAYGROUND
3		116041	MIRACLE ID LABEL - KIDS' CHOICE
12		117007	WASHER 7/16 FLAT 18-8 SS
12		713102	SUPPORT DECK-CASTING
12	**	713500DG	PARTS CARTON (4) 1/2 CLAMPS DG
48		104403	SCREW 1/4-14 X 1 1/4 HEX WSHR H
48		104749	1/4-20X 1-1/4, 6 LOBE BHD W/PAT
48		713010DG	5 IN. CLAMPING RING-1/2 CLAMP D
3		713502DG	SQ DECK, COATED, PVILLE DG
1	*	7145385	CENTER STAGE OCTAGON 5' DECK FOR ROOF
4	**	713500DG	PARTS CARTON (4) 1/2 CLAMPS DG
16		104403	SCREW 1/4-14 X 1 1/4 HEX WSHR H
16		104749	1/4-20X 1-1/4, 6 LOBE BHD W/PAT
16		713010DG	5 IN. CLAMPING RING-1/2 CLAMP D
8		982276GV	POST CONNECTOR, GALV
8		982375DG	POST ASSY, 8-ARM PTD DG
8		982457DG	POST COVER, 6 & 8 arm DG
4		982900DG	DECK EDGE ASSY 8SIDE, PVC'D DG
1		982924DG	DECK CNTR ASSY 8SIDE, PVC'D DG
1		982939DG	PEDESTAL ASSY 8SIDE 5FT PTD DG
1	**	982958	PARTS CARTON 8-SIDE CS DECK
4		104097	3/8-16 X 2 BUTTON HD SS WAXED
8		104165	1/2 - 13 X 5 1/2 WEDGE ANCH. ST
16		104166	BOLT 3/8-16 X 1 1/2 BHCS 6 LOBE
28		104262	BOLT 3/8-16 X 2 1/4 BHCS 6 LOBE
48		104403	SCREW 1/4-14 X 1 1/4 HEX WSHR H
8		104746	1/2X X 1-1/2 SHLDR BOLT,STL
40		110030	NUT 3/8-16 NYLOCK 18-8 SS
1		116021	MIRACLE ID LABEL - GENERIC
1		116022	WARNING LABEL PLAYGROUND
1		116040	MIRACLE ID LABEL - CENTER STAGE
90		117071	WASHER 3/8 (7/16 ID X 1 7/16 OD

CONTINUED

BILL OF MATERIALS (PARTS LIST) 06/02/98 13:12:17

WORK ORDER: 435141 CUST #: 5544A04 SHIP DATE: W.O. PAGE: 2

CITY OF BROOKLYN PARK
PARK & RECRATION - GARY
5200 85TH AVENUE N.
BROOKLYN PARK MN 55443

LEGEND: * -> MODEL
**-> PARTS CARTON

REFER TO LAST PAGE OF PARTS LIST
FOR PARTS CARTON SUMMARY.

QUANTITY	MODEL/COMPONENT	DESCRIPTION
12	* 714552	POST GALV 5" OD X 136"
12	713552DG	POST ASSY 5" O.D.X 136" DG
3	* 714555	POST 5" O.D. X 76" (GROUND LEVEL ITEMS)
3	713555DG	POST ASSY 5" O.D. X 76" DG
1	* 714700	5' SIDE-BY-SIDE W/CANOPY (3' DECK)
1	112590SN	DOUBLE WIDE SLIDE 3' DECK SN
1	112605SN	WIDE SLIDE TRANS. SIT-DOWN CANOPY,
1	** 713001DG	PARTS CARTON 714700 DG
4	104068	3/8-16 X 1 1/2 HHCS, SS
2	104285	BOLT 3/8-16 X 3/8 SOCKET SET SC
2	104286	BOLT 3/8-16 X 1 BHCS 6 LOBE, 18
4	104750	1/4-20X5/8"6LOB W/P BHCS SS
4	117005	WASHER 3/8 FLAT 18-8 SS
6	117105	WASHER 3/8 INTERNAL TOOTH LOCK
2	713002DG	5IN BAR SOCKET - TOP HALF, PAIN
2	713003DG	5IN BAR SOCKET - BOTTOM HALF, P
1	713110DB	RUNG, 41" DB
1	** 713500DG	PARTS CARTON (4) 1/2 CLAMPS DG
4	104403	SCREW 1/4-14 X 1 1/4 HEX WSHR H
4	104749	1/4-20X 1-1/4, 6 LOBE BHD W/PAT
4	713010DG	5 IN. CLAMPING RING-1/2 CLAMP D
1	978930BK	FRONT LEG ROCKITE SKI SLIDE BK
1	** 985281DG	PARTS CARTON 714737 DG
2	104285	BOLT 3/8-16 X 3/8 SOCKET SET SC
2	104286	BOLT 3/8-16 X 1 BHCS 6 LOBE, 18
4	104750	1/4-20X5/8"6LOB W/P BHCS SS
2	713002DG	5IN BAR SOCKET - TOP HALF, PAIN
2	713003DG	5IN BAR SOCKET - BOTTOM HALF, P
2	979297	STUB ASSY-CANOPY FITTING
1	* 7147142	PANEL WHEEL FIRE TRUCK

CONTINUED

BILL OF MATERIALS (PARTS LIST) 06/02/98 13:12:17

WORK ORDER: 435141 CUST #: 5544A04 SHIP DATE: W.O. PAGE: 3

CITY OF BROOKLYN PARK
PARK & RECRATION - GARY
5200 85TH AVENUE N.
BROOKLYN PARK MN 55443

LEGEND: * -> MODEL
**-> PARTS CARTON

REFER TO LAST PAGE OF PARTS LIST
FOR PARTS CARTON SUMMARY.

QUANTITY		MODEL/COMPONENT	DESCRIPTION
1		982412	PANEL ROUTERED FIRE TRUCK
1		982501DB	RUNG BRACKET ASSY PANEL DB
1	**	982630DG	PARTS CARTON WHEEL PANELS DG
1		103529	1 1/4" PIPE PLUG FOR 1 7/16" ID
2		104097	3/8-16 X 2 BUTTON HD SS WAXED
2		104166	BOLT 3/8-16 X 1 1/2 BHCS 6 LOBE
1		104278	1/2-13 X 3" BHD 6 LOB W/PIN
2		104285	BOLT 3/8-16 X 3/8 SOCKET SET SC
4		104750	1/4-20X5/8"6LOB W/P BHCS SS
4		110030	NUT 3/8-16 NYLOCK 18-8 SS
1		110061	1/2-13 NYLOK HEX NUT WXD SS
1		112596	PLASTIC SOLID STEERING WHEEL
8		117005	WASHER 3/8 FLAT 18-8 SS
2		117007	WASHER 7/16 FLAT 18-8 SS
2		713002DG	5IN BAR SOCKET - TOP HALF, PAIN
2		713003DG	5IN BAR SOCKET - BOTTOM HALF, P
1	*	7147143B	PANEL WHEEL POLICE BELOW DK
2	**	713500DG	PARTS CARTON (4) 1/2 CLAMPS DG
8		104403	SCREW 1/4-14 X 1 1/4 HEX WSHR H
8		104749	1/4-20X 1-1/4, 6 LOBE BHD W/PAT
8		713010DG	5 IN. CLAMPING RING-1/2 CLAMP D
1		982413	PANEL ROUTERED POLICE CAR
2		982501DB	RUNG BRACKET ASSY PANEL DB
1	**	982629DG	PARTS CARTON BEL DK PANELS DG
1		103529	1 1/4" PIPE PLUG FOR 1 7/16" ID
4		104166	BOLT 3/8-16 X 1 1/2 BHCS 6 LOBE
1		104278	1/2-13 X 3" BHD 6 LOB W/PIN
4		104285	BOLT 3/8-16 X 3/8 SOCKET SET SC
8		104750	1/4-20X5/8"6LOB W/P BHCS SS
4		110030	NUT 3/8-16 NYLOCK 18-8 SS
1		110061	1/2-13 NYLOK HEX NUT WXD SS
1		112596	PLASTIC SOLID STEERING WHEEL
8		117005	WASHER 3/8 FLAT 18-8 SS
2		117007	WASHER 7/16 FLAT 18-8 SS
4		713002DG	5IN BAR SOCKET - TOP HALF, PAIN
4		713003DG	5IN BAR SOCKET - BOTTOM HALF, P

CONTINUED

BILL OF MATERIALS (PARTS LIST) 06/02/98 13:12:18

WORK ORDER: 435141 CUST #: 5544A04 SHIP DATE: W.O. PAGE: 4

CITY OF BROOKLYN PARK
PARK & RECRATION - GARY
5200 85TH AVENUE N.
BROOKLYN PARK MN 55443

LEGEND: * -> MODEL
**-> PARTS CARTON

REFER TO LAST PAGE OF PARTS LIST
FOR PARTS CARTON SUMMARY.

QUANTITY		MODEL/COMPONENT	DESCRIPTION
1	*	714719	CLIFF CLIMBER 3 & 5FT DECK
1		713202DB	VERT CLIMBER DECK ENC. DB
1	**	713259DG	PARTS CARTON - CLIMBERS DG
2		104166	BOLT 3/8-16 X 1 1/2 BHCS 6 LOBE
1		104262	BOLT 3/8-16 X 2 1/4 BHCS 6 LOBE
2		104285	BOLT 3/8-16 X 3/8 SOCKET SET SC
4		104750	1/4-20X5/8"6LOB W/P BHCS SS
2		110030	NUT 3/8-16 NYLOCK 18-8 SS
4		117005	WASHER 3/8 FLAT 18-8 SS
1		117105	WASHER 3/8 INTERNAL TOOTH LOCK
2		713002DG	5IN BAR SOCKET - TOP HALF, PAIN
2		713003DG	5IN BAR SOCKET - BOTTOM HALF, P
1		983334DB	CLIFF CLIMBER, 5FT DECK DB
1	*	714721	CANYON CLIMBER, 3 & 5FT DECKS
1		713202DB	VERT CLIMBER DECK ENC. DB
1	**	713259DG	PARTS CARTON - CLIMBERS DG
2		104166	BOLT 3/8-16 X 1 1/2 BHCS 6 LOBE
1		104262	BOLT 3/8-16 X 2 1/4 BHCS 6 LOBE
2		104285	BOLT 3/8-16 X 3/8 SOCKET SET SC
4		104750	1/4-20X5/8"6LOB W/P BHCS SS
2		110030	NUT 3/8-16 NYLOCK 18-8 SS
4		117005	WASHER 3/8 FLAT 18-8 SS
1		117105	WASHER 3/8 INTERNAL TOOTH LOCK
2		713002DG	5IN BAR SOCKET - TOP HALF, PAIN
2		713003DG	5IN BAR SOCKET - BOTTOM HALF, P
1		983648DB	CANYON CLIMBER 5FT, PTD DB
1	*	714723	8' BURMA BRIDGE
2		983638DB	HANDRAIL, PTD DB
1		983700DG	DECK, PTD DG
4		983725DB	ENCLOSURE, PTD DB
1	**	983773DG	PARTS CARTON, BURMA BRIDGE DG
6		104155	BOLT 1/2-13 X 2 1/4 BHCS 6 LOBE
8		104166	BOLT 3/8-16 X 1 1/2 BHCS 6 LOBE
12		104262	BOLT 3/8-16 X 2 1/4 BHCS 6 LOBE
4		104285	BOLT 3/8-16 X 3/8 SOCKET SET SC
8		104750	1/4-20X5/8"6LOB W/P BHCS SS

CONTINUED

BILL OF MATERIALS (PARTS LIST) 06/02/98 13:12:18

WORK ORDER: 435141 CUST #: 5544A04 SHIP DATE: W.O. PAGE: 5

CITY OF BROOKLYN PARK
PARK & RECRATION - GARY
5200 85TH AVENUE N.
BROOKLYN PARK MN 55443

LEGEND: * -> MODEL
**-> PARTS CARTON

REFER TO LAST PAGE OF PARTS LIST
FOR PARTS CARTON SUMMARY.

QUANTITY		MODEL/COMPONENT	DESCRIPTION
24		110030	NUT 3/8-16 NYLOCK 18-8 SS
6		110061	1/2-13 NYLOK HEX NUT WXD SS
30		117005	WASHER 3/8 FLAT 18-8 SS
12		117020	WASHER 1/2 FLAT 18-8 SS
4		713002DG	5IN BAR SOCKET - TOP HALF, PAIN
4		713003DG	5IN BAR SOCKET - BOTTOM HALF, P
4		901897	SPACER
1	*	714729	8' SERPENT TREK, DECK TO END LADDER
2		714552	POST 5" O.D. X 136" 3' TO 5' DECKS
2		713552DG	POST ASSY 5" O.D.X 136" DG
1		7147225	8' SERPENT TREK, DECK TO DECK
1	**	982401DG	PARTS CARTON 714-863-5 DG
4		104285	BOLT 3/8-16 X 3/8 SOCKET SET S
8		104403	SCREW 1/4-14 X 1 1/4 HEX WSHR
8		104749	1/4-20X 1-1/4, 6 LOBE BHD W/PA
8		104750	1/4-20X5/8"6LOB W/P BHCS SS
8		117103	1/4"INTRNL TOOTH LOK WASHER SS
4		713002DG	5IN BAR SOCKET - TOP HALF, PAI
4		713003DG	5IN BAR SOCKET - BOTTOM HALF,
8		713010DG	5 IN. CLAMPING RING-1/2 CLAMP
1		983364DB	SERPENT TREK ASSY, 8FT DB
1		7148135	DECK ENCLOSURE FOR OVERHEAD CLIMBE
2		713212DB	ENCLOS ASSY,O'HEAD CLMBRS DB
1	**	982399DG	PARTS CARTON 714-813-5 DG
4		104166	BOLT 3/8-16 X 1 1/2 BHCS 6 LOB
2		104285	BOLT 3/8-16 X 3/8 SOCKET SET S
4		104750	1/4-20X5/8"6LOB W/P BHCS SS
4		110030	NUT 3/8-16 NYLOCK 18-8 SS
8		117005	WASHER 3/8 FLAT 18-8 SS
2		713002DG	5IN BAR SOCKET - TOP HALF, PAI
2		713003DG	5IN BAR SOCKET - BOTTOM HALF,
1		7148155	END LADDER FOR OVERHEAD CLIMBERS O
2	**	713661DG	PARTS CARTON 714843 DG
4		104285	BOLT 3/8-16 X 3/8 SOCKET SET S
8		104403	SCREW 1/4-14 X 1 1/4 HEX WSHR

CONTINUED

BILL OF MATERIALS (PARTS LIST) 06/02/98 13:12:18

WORK ORDER: 435141 CUST #: 5544A04 SHIP DATE: W.O. PAGE: 6

CITY OF BROOKLYN PARK
PARK & RECRATION - GARY
5200 85TH AVENUE N.
BROOKLYN PARK MN 55443

LEGEND: * -> MODEL
**-> PARTS CARTON

REFER TO LAST PAGE OF PARTS LIST FOR PARTS CARTON SUMMARY.

QUANTITY		MODEL/COMPONENT	DESCRIPTION
8		104749	1/4-20X 1-1/4, 6 LOBE BHD W/PA
8		104750	1/4-20X5/8"6LOB W/P BHCS SS
8		117103	1/4"INTRNL TOOTH LOK WASHER SS
4		713002DG	5IN BAR SOCKET - TOP HALF, PAI
4		713003DG	5IN BAR SOCKET - BOTTOM HALF,
8		713010DG	5 IN. CLAMPING RING-1/2 CLAMP
1		982201DB	VERTICAL LADDER-OH CLMBR KC DB
1	*	714730	TREEHOUSE ROOF FOR OCTAGON DECK
4		983322DB	TREEHOUSE ROOF, 1/4 SECTION MOLDED
8		983392DG	ROOF MOUNT RECEIVER, PTD DG
1	**	983395DB	PARTS CARTON , 730
54		103543DB	4" CYCLONE PLUG DB
32		104068	3/8-16 X 1 1/2 HHCS, SS
32		104356	1/4"-20 X 1 1/4" HHCS SS
16		104403	SCREW 1/4-14 X 1 1/4 HEX WSHR H
32		110031	3/8-16 HEX NUT 304 SS
32		110231	1/4-20 RUBBER WELL-NUT, #J-1420
32		117001	WASHER, 1/4 FLAT SS
64		117005	WASHER 3/8 FLAT 18-8 SS
1	*	714731	TRAP DOOR CLIMBER (3' & 5' DECK)
1		713202DB	VERT CLIMBER DECK ENC. DB
1	**	713259DG	PARTS CARTON - CLIMBERS DG
2		104166	BOLT 3/8-16 X 1 1/2 BHCS 6 LOBE
1		104262	BOLT 3/8-16 X 2 1/4 BHCS 6 LOBE
2		104285	BOLT 3/8-16 X 3/8 SOCKET SET SC
4		104750	1/4-20X5/8"6LOB W/P BHCS SS
2		110030	NUT 3/8-16 NYLOCK 18-8 SS
4		117005	WASHER 3/8 FLAT 18-8 SS
1		117105	WASHER 3/8 INTERNAL TOOTH LOCK
2		713002DG	5IN BAR SOCKET - TOP HALF, PAIN
2		713003DG	5IN BAR SOCKET - BOTTOM HALF, P
1		983451DB	TRAP DOOR CLIMBER, 5FT PAINTED DB
1	*	7148002	SLD WAVE ROCKITE 10' 5' DK

CONTINUED

BILL OF MATERIALS (PARTS LIST) 06/02/98 13:12:18

WORK ORDER: 435141 CUST #: 5544A04 SHIP DATE: W.O. PAGE: 7

CITY OF BROOKLYN PARK
PARK & RECRATION - GARY
5200 85TH AVENUE N.
BROOKLYN PARK MN 55443

LEGEND: * -> MODEL
**-> PARTS CARTON

REFER TO LAST PAGE OF PARTS LIST
FOR PARTS CARTON SUMMARY.

QUANTITY		MODEL/COMPONENT	DESCRIPTION
2		112584SN	WAVE SECION ROCKITE SLIDES SN
1		112586SN	ENTRY SECTION ROCKITE SLIDE SN
1		112603SN	HURRICANE & WAVE SLIDE EXIT
1	**	713006SN	PARTS CARTON 7148002 SN
12		103543SN	4" CYCLONE PLUG SN
8		104040	5/16-18 X 1 BHD BLT SKT SS
4		104049	3/8-16 X 3/4 SKT SET SS
4		104068	3/8-16 X 1 1/2 HHCS, SS
18		104227	3/8-16 X 1 3/4 HH TAP, SS
2		104262	BOLT 3/8-16 X 2 1/4 BHCS 6 LOBE
4		104286	BOLT 3/8-16 X 1 BHCS 6 LOBE, 18
18		110030	NUT 3/8-16 NYLOCK 18-8 SS
8		117003	WASHER 5/16 FLAT 18-8 SS
40		117005	WASHER 3/8 FLAT 18-8 SS
36		117007	WASHER 7/16 FLAT 18-8 SS
8		117104	5/16"INTRNL TOOTH LOK WASHR SS
4		117105	WASHER 3/8 INTERNAL TOOTH LOCK
2		976992SN	LEG SUPPORT BRACKET ALUM (WAVE/
1		713110DB	RUNG, 41" DB
1		976995DB	LEG-38" "L" ROTO WAVE PAINTED DB
1		976997DB	LEG-56" "L" ASSY PAINTED DB
1		978923BK	FRONT LEG CYCLONE SLIDE BLACK
1		983953SN	SLIDE ENTRY PANEL SN
1	**	984069DG	PRT CTN 7148002/8012/8022/8272/8282/8292
2		104166	BOLT 3/8-16 X 1 1/2 BHCS 6 LOBE
2		104285	BOLT 3/8-16 X 3/8 SOCKET SET SC
4		104750	1/4-20X5/8"6LOB W/P BHCS SS
2		117005	WASHER 3/8 FLAT 18-8 SS
2		117105	WASHER 3/8 INTERNAL TOOTH LOCK
2		713002DG	5IN BAR SOCKET - TOP HALF, PAIN
2		713003DG	5IN BAR SOCKET - BOTTOM HALF, P
1	*	714808	CLIMBER POLE 5' OR 6'6" DK
1		713166DB	POLE W/INSERT CLIMBING DB
1		713202DB	VERT CLIMBER DECK ENC. DB
1	**	713259DG	PARTS CARTON - CLIMBERS DG
2		104166	BOLT 3/8-16 X 1 1/2 BHCS 6 LOBE
1		104262	BOLT 3/8-16 X 2 1/4 BHCS 6 LOBE
2		104285	BOLT 3/8-16 X 3/8 SOCKET SET SC
4		104750	1/4-20X5/8"6LOB W/P BHCS SS

CONTINUED

BILL OF MATERIALS (PARTS LIST) 06/02/98 13:12:19

WORK ORDER: 435141 CUST #: 5544A04 SHIP DATE: W.O. PAGE: 8

CITY OF BROOKLYN PARK
PARK & RECRATION - GARY
5200 85TH AVENUE N.
BROOKLYN PARK MN 55443

LEGEND: * -> MODEL
**-> PARTS CARTON

REFER TO LAST PAGE OF PARTS LIST
FOR PARTS CARTON SUMMARY.

QUANTITY	MODEL/COMPONENT	DESCRIPTION
2	110030	NUT 3/8-16 NYLOCK 18-8 SS
4	117005	WASHER 3/8 FLAT 18-8 SS
1	117105	WASHER 3/8 INTERNAL TOOTH LOCK
2	713002DG	5IN BAR SOCKET - TOP HALF, PAIN
2	713003DG	5IN BAR SOCKET - BOTTOM HALF, P
1	* 714907	SLD TWISTER ROCKITE 3' DK
1	** 713257DG	PARTS CARTON 714907 DG
6	104166	BOLT 3/8-16 X 1 1/2 BHCS 6 LOBE
2	104285	BOLT 3/8-16 X 3/8 SOCKET SET SC
2	104286	BOLT 3/8-16 X 1 BHCS 6 LOBE, 18
4	104750	1/4-20X5/8"6LOB W/P BHCS SS
2	110030	NUT 3/8-16 NYLOCK 18-8 SS
8	117005	WASHER 3/8 FLAT 18-8 SS
6	117105	WASHER 3/8 INTERNAL TOOTH LOCK
2	713002DG	5IN BAR SOCKET - TOP HALF, PAIN
2	713003DG	5IN BAR SOCKET - BOTTOM HALF, P
1	978923BK	FRONT LEG CYCLONE SLIDE BLACK
1	982652SN	TWISTER SLIDE DRILLED TC
1	983076DB	ENCLOSURE TWISTER SLIDE KID'S CHOI
1	* 714943	CLMBR CURVED LOOP 5'&6'6"DK
1	713204DB	ENCLOS ASSY, LOOP CLIMBER DB
1	** 713262DG	PARTS CARTON CURVED LOOP DG
4	104166	BOLT 3/8-16 X 1 1/2 BHCS 6 LOBE
2	104285	BOLT 3/8-16 X 3/8 SOCKET SET SC
4	104750	1/4-20X5/8"6LOB W/P BHCS SS
2	110030	NUT 3/8-16 NYLOCK 18-8 SS
6	117005	WASHER 3/8 FLAT 18-8 SS
2	117105	WASHER 3/8 INTERNAL TOOTH LOCK
2	713002DG	5IN BAR SOCKET - TOP HALF, PAIN
2	713003DG	5IN BAR SOCKET - BOTTOM HALF, P
1	979139DB	CURVED LOOP CLIMBER DB
1	* 7149595	STAIR ATA W/O SPOKES(3'-5')
1	** 713248DG	PARTS CARTON STAIRS DG

CONTINUED

BILL OF MATERIALS (PARTS LIST) 06/02/98 13:12:19

WORK ORDER: 435141 CUST #: 5544A04 SHIP DATE: W.O. PAGE: 9

CITY OF BROOKLYN PARK
PARK & RECRATION - GARY
5200 85TH AVENUE N.
BROOKLYN PARK MN 55443

LEGEND: * -> MODEL
**-> PARTS CARTON

REFER TO LAST PAGE OF PARTS LIST
FOR PARTS CARTON SUMMARY.

QUANTITY	MODEL/COMPONENT	DESCRIPTION
8	104155	BOLT 1/2-13 X 2 1/4 BHCS 6 LOBE
4	104166	BOLT 3/8-16 X 1 1/2 BHCS 6 LOBE
8	104262	BOLT 3/8-16 X 2 1/4 BHCS 6 LOBE
4	104285	BOLT 3/8-16 X 3/8 SOCKET SET SC
8	104750	1/4-20X5/8"6LOB W/P BHCS SS
6	110030	NUT 3/8-16 NYLOCK 18-8 SS
8	110061	1/2-13 NYLOK HEX NUT WXD SS
10	117005	WASHER 3/8 FLAT 18-8 SS
16	117007	WASHER 7/16 FLAT 18-8 SS
6	117105	WASHER 3/8 INTERNAL TOOTH LOCK
4	713002DG	5IN BAR SOCKET - TOP HALF, PAIN
4	713003DG	5IN BAR SOCKET - BOTTOM HALF, P
6	901897	SPACER
1	713414DG	STAIR ATA 24" DK TO DK DG
2	713448DB	ENCLOS ASSY H'RAIL TOP DB
2	713449DB	DECK ENCLOS ASSY BOTTOM DB
2	981939DB	H'RAIL ASSY STAIR W/O SPKS DB
1	* 7149621	SLD CYC 8' STEPS 5' DECK
1	** 713455DG	PARTS CARTON CYCLONE DG
4	104153	1/2-13 X 2 HHCS, SS
4	104155	BOLT 1/2-13 X 2 1/4 BHCS 6 LOBE
2	104166	BOLT 3/8-16 X 1 1/2 BHCS 6 LOBE
10	104262	BOLT 3/8-16 X 2 1/4 BHCS 6 LOBE
2	104285	BOLT 3/8-16 X 3/8 SOCKET SET SC
4	104357	SCR.#10 X 1 ONE WAY SLT, SS
1	104441	1/2-13 X 1-1/2 BHD SS
4	104750	1/4-20X5/8"6LOB W/P BHCS SS
4	110030	NUT 3/8-16 NYLOCK 18-8 SS
9	110061	1/2-13 NYLOK HEX NUT WXD SS
6	117005	WASHER 3/8 FLAT 18-8 SS
18	117007	WASHER 7/16 FLAT 18-8 SS
4	117049	WASH,SEAL-NEO.BOND#12X9/16 SS
8	117105	WASHER 3/8 INTERNAL TOOTH LOCK
2	713002DG	5IN BAR SOCKET - TOP HALF, PAIN
2	713003DG	5IN BAR SOCKET - BOTTOM HALF, P
4	901897	SPACER
2	976468	BACK UP FLANGE 1/4"X1"X6"
1	850184SNDB	PLATFORM CANOPY SAND/DARK BLUE
1	978923BK	FRONT LEG CYCLONE SLIDE BLACK

CONTINUED

BILL OF MATERIALS (PARTS LIST) 06/02/98 13:12:19

WORK ORDER: 435141 CUST #: 5544A04 SHIP DATE: W.O. PAGE: 10

CITY OF BROOKLYN PARK
PARK & RECRATION - GARY
5200 85TH AVENUE N.
BROOKLYN PARK MN 55443

LEGEND: * -> MODEL
**-> PARTS CARTON

REFER TO LAST PAGE OF PARTS LIST
FOR PARTS CARTON SUMMARY.

QUANTITY		MODEL/COMPONENT	DESCRIPTION
1	**	980892SN	PARTS CARTON (2) 4" PLUGS
2		103543SN	4" CYCLONE PLUG SN
2		983469DB	DECK ENCLOSURE-CYCLONE SLIDES DB
2		983529DB	STAIR ENCLOSURE 714-962-1 DB
1		983531DG	PVC STAIR 714-962-1 DG
1		983534S	CYCLONE SLIDE ASSY 714-962-1
			2 1/2" CYCLONE PLUG SN
			4" CYCLONE PLUG SN
			3/8-16 X 1 1/2 HHCS, SS
			BOLT 1/2-13 X 1 BHCS SOCKET,
			3/8-16 X 1 3/4 HH TAP, SS
			NUT 3/8-16 HEX - ZINC PLATE
			CLR ADHESIVE PL PRO 2000 11
			1/2 TURN SECTION CYCLONE SN
			EXIT SECTION CYCLONE SN
			1/4 TURN SECT ROTO SN
			CYCLONE PLATFORM ROCKITE SN
			WASHER 3/8 FLAT 18-8 SS
			WASHER 7/16 FLAT 18-8 SS
			WASHER 1/2 FLAT 18-8 SS
			BACK UP FLANGE 1/4"X1"X6"
			TUBE 4.500 OD X 7 GA GALV X
			BOLT 1/2-13 X 1 1/4 BHCS 6 L
1	*	714965	TRANSFER POINT W/SINGLE STEP (3' DECK)
1		713869BK	KC TP BTM STEP T-LEG PTD BK
1		713872DG	KC TP BTM STEP ASSY PVC DG
1	**	713894DG	PARTS CARTON KC TP DG
29		104166	BOLT 3/8-16 X 1 1/2 BHCS 6 LOBE
6		104262	BOLT 3/8-16 X 2 1/4 BHCS 6 LOBE
2		104285	BOLT 3/8-16 X 3/8 SOCKET SET SC
4		104750	1/4-20X5/8"6LOB W/P BHCS SS
31		110030	NUT 3/8-16 NYLOCK 18-8 SS
55		117005	WASHER 3/8 FLAT 18-8 SS
4		117105	WASHER 3/8 INTERNAL TOOTH LOCK
2		713002DG	5IN BAR SOCKET - TOP HALF, PAIN
2		713003DG	5IN BAR SOCKET - BOTTOM HALF, P
2		901897	SPACER
8		983155DG	STAIR HANGER PAINTED DG
1		982976DG	ATA STAIRS 21-3/4 RISE, PVC DG

CONTINUED

BILL OF MATERIALS (PARTS LIST) 06/02/98 13:12:19

WORK ORDER: 435141 CUST #: 5544A04 SHIP DATE: W.O. PAGE: 11

CITY OF BROOKLYN PARK
PARK & RECRATION - GARY
5200 85TH AVENUE N.
BROOKLYN PARK MN 55443

LEGEND: * -> MODEL
**-> PARTS CARTON

REFER TO LAST PAGE OF PARTS LIST
FOR PARTS CARTON SUMMARY.

QUANTITY		MODEL/COMPONENT	DESCRIPTION
1		982987DG	ATA TRANSFER PT DECK, PVC DG
1		983000DB	TP HANDRAIL ASSY, PTD DB
2		983006DB	HANDRAIL ATA STAIRS 3FT,PTD DB
1	*	7149831B	PANEL MARBLE RACE BELOW DK
2	**	713500DG	PARTS CARTON (4) 1/2 CLAMPS DG
8		104403	SCREW 1/4-14 X 1 1/4 HEX WSHR H
8		104749	1/4-20X 1-1/4, 6 LOBE BHD W/PAT
8		713010DG	5 IN. CLAMPING RING-1/2 CLAMP D
1	**	713746DG	PARTS CARTON 714-904B DG
4		104285	BOLT 3/8-16 X 3/8 SOCKET SET SC
8		104750	1/4-20X5/8"6LOB W/P BHCS SS
4		713002DG	5IN BAR SOCKET - TOP HALF, PAIN
4		713003DG	5IN BAR SOCKET - BOTTOM HALF, P
2		982477DB	PANEL ENCLOSURE- KC BD DB
1		984084SN	MARBLE RACES PANEL ASSEMBLY, KC SN
1	*	7149832	PANEL MOTOR SKILLS
1	**	713009DG	PARTS CARTON PANELS DG
2		104166	BOLT 3/8-16 X 1 1/2 BHCS 6 LOBE
2		104285	BOLT 3/8-16 X 3/8 SOCKET SET SC
4		104750	1/4-20X5/8"6LOB W/P BHCS SS
2		110030	NUT 3/8-16 NYLOCK 18-8 SS
4		117005	WASHER 3/8 FLAT 18-8 SS
2		713002DG	5IN BAR SOCKET - TOP HALF, PAIN
2		713003DG	5IN BAR SOCKET - BOTTOM HALF, P
2		982471DB	ENCLOSURE ASSY, PAINTED DB
1		984101SN	MOTOR SKILLS PANEL ASSEMBLY, KC SN
1	*	7149905	STAIR W/O SPOKES (3' TO 5')
1	**	713248DG	PARTS CARTON STAIRS DG
8		104155	BOLT 1/2-13 X 2 1/4 BHCS 6 LOBE
4		104166	BOLT 3/8-16 X 1 1/2 BHCS 6 LOBE
8		104262	BOLT 3/8-16 X 2 1/4 BHCS 6 LOBE
4		104285	BOLT 3/8-16 X 3/8 SOCKET SET SC
8		104750	1/4-20X5/8"6LOB W/P BHCS SS

CONTINUED

BILL OF MATERIALS (PARTS LIST) 06/02/98 13:12:20

WORK ORDER: 435141 CUST #: 5544A04 SHIP DATE: W.O. PAGE: 12

CITY OF BROOKLYN PARK
PARK & RECRATION - GARY
5200 85TH AVENUE N.
BROOKLYN PARK MN 55443

LEGEND: * -> MODEL
**-> PARTS CARTON

REFER TO LAST PAGE OF PARTS LIST
FOR PARTS CARTON SUMMARY.

QUANTITY		MODEL/COMPONENT	DESCRIPTION	
6		110030	NUT 3/8-16 NYLOCK 18-8 SS	
8		110061	1/2-13 NYLOK HEX NUT WXD SS	
10		117005	WASHER 3/8 FLAT 18-8 SS	
16		117007	WASHER 7/16 FLAT 18-8 SS	
6		117105	WASHER 3/8 INTERNAL TOOTH LOCK	
4		713002DG	5IN BAR SOCKET - TOP HALF, PAIN	
4		713003DG	5IN BAR SOCKET - BOTTOM HALF, P	
6		901897	SPACER	
1		713404DG	STAIR STD 24" DK TO DK	DG
2		713448DB	ENCLOS ASSY H'RAIL TOP	DB
2		713449DB	DECK ENCLOS ASSY BOTTOM	DB
2		981941DB	H'RAIL ASSY STAIR W/O SPKS	DB
1	*	714995	CARGO LADDER (5' DECK)	
1		713110DB	RUNG, 41"	DB
1		982553DB	ANCHOR-CARGO NET W/RUNGS	DB
1		982555DG	CARGO NET W/RUNGS 5'DK PVC	DG
1	**	983100DG	PARTS CARTON 714-995 DG	
4		104097	3/8-16 X 2 BUTTON HD SS WAXED	
2		104285	BOLT 3/8-16 X 3/8 SOCKET SET SC	
4		104750	1/4-20X5/8"6LOB W/P BHCS SS	
4		110030	NUT 3/8-16 NYLOCK 18-8 SS	
8		117005	WASHER 3/8 FLAT 18-8 SS	
2		713002DG	5IN BAR SOCKET - TOP HALF, PAIN	
2		713003DG	5IN BAR SOCKET - BOTTOM HALF, P	
1	*	714999	CUSTOMER SERVICE KIT KC	

TOTAL ORDER WEIGHT
7,651.00

POST & PVC GREEN
ACCENTS & ROOF ROYAL BLUE
ROCKITE SAND CANOPY SAND/ROYAL BLUE

Mark For: CITY PARK

DRIVER MUST CALL 48 HOURS BEFORE DELIVER

RON OTTO 612-437-7711

CONTINUED

BILL OF MATERIALS (PARTS LIST) 06/02/98 13:12:20

WORK ORDER: 435141 CUST #: 5544A04 SHIP DATE: W.O. PAGE: 13

CITY OF BROOKLYN PARK
PARK & RECRATION - GARY
5200 85TH AVENUE N.
BROOKLYN PARK MN 55443

LEGEND: * -> MODEL
**-> PARTS CARTON

REFER TO LAST PAGE OF PARTS LIST
FOR PARTS CARTON SUMMARY.

QUANTITY	MODEL/COMPONENT	DESCRIPTION

PARTS CARTON SUMMARY:

MODEL / PARTS CARTON	
714502	DECK SQUARE W/H'WARE
713266	PARTS CARTON 714502
713500DG	PARTS CARTON (4) 1/2 CLAMPS
7145385	CENTER STAGE OCTAGON 5' DECK F
713500DG	PARTS CARTON (4) 1/2 CLAMPS
982958	PARTS CARTON 8-SIDE CS DECK
714552	POST GALV 5" OD X 136"
714555	POST 5" O.D. X 76" (GROUND LEV
714700	5' SIDE-BY-SIDE W/CANOPY (3' D
713001DG	PARTS CARTON 714700
713500DG	PARTS CARTON (4) 1/2 CLAMPS
985281DG	PARTS CARTON 714737 DG
7147142	PANEL WHEEL FIRE TRUCK
982630DG	PARTS CARTON WHEEL PANELS
7147143B	PANEL WHEEL POLICE BELOW DK
713500DG	PARTS CARTON (4) 1/2 CLAMPS
982629DG	PARTS CARTON BEL DK PANELS
714719	CLIFF CLIMBER 3 & 5FT DECK
713259DG	PARTS CARTON - CLIMBERS
714721	CANYON CLIMBER, 3 & 5FT DECKS
713259DG	PARTS CARTON - CLIMBERS
714723	8' BURMA BRIDGE
983773DG	PARTS CARTON, BURMA BRIDGE DG
714729	8' SERPENT TREK, DECK TO END L
982401DG	PARTS CARTON 714-863-5
982399DG	PARTS CARTON 714-813-5
713661DG	PARTS CARTON 714843
714730	TREEHOUSE ROOF FOR OCTAGON DEC
983395DB	PARTS CARTON , 730
714731	TRAP DOOR CLIMBER (3' & 5' DEC
713259DG	PARTS CARTON - CLIMBERS
7148002	SLD WAVE ROCKITE 10' 5' DK
713006SN	PARTS CARTON 7148002
984069DG	PRT CTN 7148002/8012/8022/8272
714808	CLIMBER POLE 5' OR 6'6" DK
713259DG	PARTS CARTON - CLIMBERS
714907	SLD TWISTER ROCKITE 3' DK
713257DG	PARTS CARTON 714907

CONTINUED

BILL OF MATERIALS (PARTS LIST) 06/02/98 13:12:20

WORK ORDER: 435141 CUST #: 5544A04 SHIP DATE: W.O. PAGE: 14

CITY OF BROOKLYN PARK
PARK & RECRATION - GARY
5200 85TH AVENUE N.
BROOKLYN PARK MN 55443

LEGEND: * -> MODEL
**-> PARTS CARTON

REFER TO LAST PAGE OF PARTS LIST
FOR PARTS CARTON SUMMARY.

QUANTITY	MODEL/COMPONENT	DESCRIPTION
	714943	CLMBR CURVED LOOP 5'&6'6"DK
	713262DG	PARTS CARTON CURVED LOOP
	7149595	STAIR ATA W/O SPOKES(3'-5')
	713248DG	PARTS CARTON STAIRS
	7149621	SLD CYC 8' STEPS 5' DECK
	713455DG	PARTS CARTON CYCLONE
	980892SN	PARTS CARTON (2) 4" PLUGS
	714965	TRANSFER POINT W/SINGLE STEP (
	713894DG	PARTS CARTON KC TP
	7149831B	PANEL MARBLE RACE BELOW DK
	713500DG	PARTS CARTON (4) 1/2 CLAMPS
	713746DG	PARTS CARTON 714-904B
	7149832	PANEL MOTOR SKILLS
	713009DG	PARTS CARTON PANELS
	7149905	STAIR W/O SPOKES (3' TO 5')
	713248DG	PARTS CARTON STAIRS
	714995	CARGO LADDER (5' DECK)
	983100DG	PARTS CARTON 714-995 DG
	714999	CUSTOMER SERVICE KIT KC